FreeRider®

working together

ATTENTION
Read all parts in this manual before operating your scooter

FR510DXs2b

FR168-3X/ FR-168-3Xs

FR510DXX/ FR510DXXs/FR510DXXsb

USERS INSTRUCTION MANUAL

FOREWORD

Please read and follow all instructions in this Users Instruction Manual before attempting to operate your **Freerider** Scooter for the first time. If there is anything in this manual that you do not understand, or if you require additional assistance for setting it up , contact your Authorized **Freerider** Agent.

Using your **Freerider** product safely depends upon your diligence in following the warnings, cautions and instructions in this manual. Using your **Freerider** Scooter safely also depends upon your good judgment and / or common sense, as well as that of your Provider, Carer or Health Professional. Always think safety!

CONTENTS

Introduction 2
Product description. 3
Purpose of your **Freerider** Scooter 5
Rules for safe use. 5
Getting to know your **Freerider** Scooter. 6
Operating your **Freerider** Scooter. 7
Freewheeling your **Freerider** Scooter 12
Safety instructions and warnings 13
Safety instruction labels 17
Learning to get about 17
Transporting your Scooter for journeys away. 20
Dismantling your Scooter 21
Re-Assembling your Scooter 23
Battery and battery charging 24
Care and maintenance. 27
Basic fault finding 31
Technical specification. 34
Circuit diagrams. 36
Advisory safety notice 39
Code of practice for Class 3 vehicle users 40
Scooter spare parts 42
Optional accessories 43
Guarantee terms 44
Service history 45

INTRODUCTION

Congratulations on purchase of your Freerider Scooter.

Please read this User Instruction Manual carefully before your attempt to operate Freerider Scooter. Your User Instruction Manual will assist you to get the most from your machine.

This manual contains important information regarding the safe operation and maintenance of your **Freerider** Scooter. Before beginning to use your Scooter, make sure you completely read and understand all instructions thoroughly. If you have any queries concerning operation or maintenance, consult your authorized Freerider dealer.

Please keep in mind that the operator of the Scooter is responsible for hazards occurring to other people or their property.

Your **Freerider** Scooter has numberous features not found on other power Scooters. With proper care and maintenance, you will enjoy many years of dependable service. Your **Freerider** Scooter needs to receive maintenance at regular intervals and should be inspected frequently for proper mechanical operation. Troubles shooting guidelines, methods of detecting improper operation and making minor adjustments are included in manual.

Follow all recommendations to obtain trouble free, safe and enjoyable operation of your **Freerider** Scooter.

Please remember that when it comes to service and repairs, your authorized **Freerider** dealer knows your **Freerider** Scooter best.

PRODUCT DESCRIPTION

The Scooter supplied has fitted as standard the following features:

- Rear-wheel drive via sealed drive axle
- 50 A/H sealed non-maintenance lead-acid batteries.
- Captain-style seat with folding backrest,adjustable width arm-rests and safety belt
- Seat rotates and is fully adjustable forwards and backwards and for height
- Multi-positional handle bars for greater comfort, driving mirror, front basket for storing personal items.
- Simple controls siturated on the steering handlebars regulate speed and braking
- Three independent braking systems
- Steering is controlled by handlebar attached to a linkage system containing front wheels
- 'State-of -the-art' micro-controller electronics ensures a smooth,comfortable and safe drive on all surfaces and gradients
- High / Low speed switch,for safe driving on footpath or roads
- Automatically controlled charging system
- Front and rear Suspension
- Front and rear lights.Direction indicator warning lights
- Two part tubular steel chassis
- Your Scooter can be removed;with the handlebars lowered and with the aid of ramps your Scooter can be transported in a suitable estate car. However your Scooter is not designed to transport the user in a moving vehicle.

Your **Freerider** Scooter should be serviced as recommended in this manual by an approved **Freerider** Distributor in order to ensure safe, reliable operation.For service details and list of consumable parts, options and accessories refer to the appropriate section of this manual.

FR510DXs2b FEATURE GUIDE

1 Steering handlebars
2 Driving mirror
3 Console
4 Charging socket
5 Basket
6 Front light
7 Direction indicator lights
8 Front and Rear bumper
9 Amber side reflectors
10 Floor mat
11 Pneumatic wheels with grey tyres
12 Rear lights and indicators
13 Adjustable angle seat with backres

FR168-3X/FR168-3XsFEATURE GUIDE

1 Steering handlebars
2 Driving mirror
3 Console
4 Charging socket
5 Basket
6 Front light
7 Direction indicator lights
8 Front and rear bumper
9 Floor mat
10 Pneumatic wheels with grey tyres
11 Rear lights and indicators
12 Adjustable angle seat with backres

FR510DXX/FR510DXXs/FR510DXXsb FEATURE GUIDE

1 Steering handlebars
2 Driving mirror
3 Console
4 Charging socket
5 Basket
6 Front light
7 Rear bumper
8 Floor mat
9 Pneumatic wheels with grey tyres
10 Rear lights and indicators
11 Adjustable angle seat with backres

PURPOSE OF YOUR FREERIDER SCOOTER

Your **Freerider** Scooter is suitable for persons who require independent mobility combined with comfort, safety, reliability and a product that needs a minimal amount of maintenance.

The intended user should possess some degree of ability with the use of both arms and hands, reasonable balance and eyesight, and a degree of spatial awareness. The user should have received training in the use of the product, preferably in their normal environment. The maximum user weight for the Scooter can be found in the rear of this manual, under'Technical Specification'.

Your Scooter is suitable for use indoors at low speeds in shopping malls or outdoors on dry, reasonably smooth level road surfaces.It climbs slopes safely up to 10° and kerbs up to 9cm(3.5").Your Scooter should not be used in torrential rain or deep snow, on loose slippery surfaces and slopes or on wet grass etc.,which could become a danger to the rider, or other road users.

Passengers must not be carried.Excess baggage outside of the seating area can affect stability.

Your Scooter is a 'Class 2' (B) * vehicle and designed for pavement use at up to 4m.p.h. And for roads at up to 8m.p.h. To drive a Scooter you must be aged 14 years or over, be suffering from some physical disability and capable of reading a car's registration number at 12.3metres(40ft).Do not drive your Scooter if you are under the influence of alcohol, drugs or medication that may affect your ability. If you are in doubt consult your doctor. You should also familiarise yourself with the current edition of the Highway Code and read the Code of Practice for Class 3 vehicles (page 39 of this manual).

*** DEFINITION**

Electrically powered Scooter are classified in the following categories :Class 3 as defined in "The use of invalid carriages on the Highways Regulations 1988". A Scooter designed for use on roads/highways with a maximum speed limitof 8mph and a facility to travel at 4mph on footways. Class 'B' as defined in the European Standard En12184: 1999.A Scooter sufficiently compact and manoeuvrable for some indoor environments and capable of travelling over longer distances and negotiating outdoor obstacles.

RULES FOR SAFE USE

These symbols below are used in this Users Instruction manual to identify and warnings and cautions. It is very important for you to read and understand them.

Warning: Failure to note the warnings in this users manual may result in personal injury.

Cautions: Failure to observe the cautions in this users manual in damage to your Scooter.

Your Scooter is a powerful machine, Please read all of the instructions in this manual before operating your Scooter. Follow notes carefully to ensure safety at all times.

Always make certain your machine is fully charged and in full working order before staring your journey.

1. Do not ride your Scooter without reading this instruction manual. Also read all of the safety instructions and warnings starting on page 13 of this manual.
2. Only drive your Scooter if your health condition will allow you to be safe.
3. Do not exceed the maximum safe gradient outlined for your vehicle(see Technical Specification,page36)
4. Do not carry passengers or exceed the maximum carrying weight.(see Technical Specifications page 34)
5. Do not mount or dismount you Scooter unless it is switched off with the freewheel device fully engaged.
6. Do not switch your Scooter 'on' with the forward/reverse lever depressed.
7. Do not mount or dismount your Scooter unless the speed adjustment dial is set to minimum.
8. Do not reverse your Scooter onto uneven inclines or surfaces. Be cautious when traversing slopes.
9. Do not drive your Scooter in a confined space unless the speed adjustment dial is set low.
10. Do not turn suddenly at full speed, especially on uneven or sloping ground.
11. Do not drive your Scooter where you cannot safely or legally walk. Obey the Highway Code.
12. Do not drive your Scooter unless the seat is locked into the driving position.
13. Do not drive your Scooter with the handlebar adjustment lock, in the unlocked position.
14. Do not drive your Scooter over deep, soft terrain (eg. soft earth, deep grass, loose gravel, snow).

15. Do not drive when under the influence of alcohol or certain drugs which may impair your safety.
16. Do not climb or descend kerbs that exceed the maximum dimension detailed under technical specification (see page34) of this manual. Do not turn when negotiating kerbs.
17. Always approach obstacles at low speed.
18. Always approach obstacles straight.
19. Always stop fully before changing direction(forward or reverse).
20. Always keep your feet on the vehicle when driving.
21. Always keep both hands on the handlebars.
22. Always proceed carefully while riding, especially as you approach the downgrade of a ramp.
23. Always reduce speed when descending inclines.
24. Always avoid uneven surfaces.
25. Always consult you physician or a therapist if in doubt about your ability to operate a Scooter.
26. Transport-Do not sit on your Scooter while it it in a moving vehicle. Always strap down your Scooter then transfer to the vehicle seat.
27. The batteries fitted to your Scooter are maintenance free and do not require topping up with distilled water. **Do not attempt to remove the safety valves situated in the top of the battery. Failuer to observe this warning will invalidate your battery guarantee.**
28. Do not drive you Scooter through deep water or clean with a high pressure hose.
29. Do not drive your Scooter through sea sand or sea water, this is very corrosive. Always wash salt splashing from the metal parts of your Scooter with hot soapy water as soon as possible.
30. Do not drive on motorways, unrestricted dual carriageways(i.e. Those with a speed limit of over 50mph),cycle lanes or in bus lanes.
31. Use of an 'amber' warning beacon is advised if you find it necessary to drive on unrestricted carriageways
32. Always switch your lights on at night or in poor visibility. Wear reflective clothing.
33. Do not drive your Scooter with a canopy in gale force wind conditions i.e. above 61km/h (38mph).
34. Do not use solid inserts in your tyres, they will increase the weight of your Scooter and reduce the effectiveness of your Scooter's suspension.
35. Do not hang bags etc. over you handlebars, this could impede driving and put you in a dangerous situation, use the front basket provided.

Please remember you are a motorised pedestrian and must observe all rules and regulations of other pedestrians wherever possible. Your Scooter has been designed for use on most roads; drive with due care and attention. Read the 'Code of Practice for Class 3

GETTING YOU KNOW YOUR SCOOTER

Your **Freerider** scooter is delivered in a strong tri-wall carton. When unpacking the carton, first remove all of the sharp metal staples which are located in the top. Carefully dispose of the staples to avoid injury. Remove all packing materials, avoid using sharp instruments as this may damage the Scooter. Carefully remove the scooter from the carton; to minimize damage to the scooter and the operator, two people should be used for this operation.

Safely dispose of all packaging materials, your local waste disposal authority can advise you on this procedure.

Your **Freerider** Scooter is delivered fully assembled, fitting the two batteries ,driving mirror and the seat assembly together with minor adjustments are detailed on the following pager under 'Operating your **Freerider** Scooter'. A full technical specification for your **Freerider** Scooter can be found at the rear of this manual.

A great deal of thought and consultation has gone into the design of your state-of-the-art, life-changing Scooter. Your **Freerider** Scooter will help to increase your mobility and therefore give you more time and energy to enjoy life. Your Scooter is a medium size four wheeled vehicle which will allow you to negotiate obstacles encountered on pavements and most roads.

The following are just some of the features that will enhance your driving.

COMFORT- The contoured seat together with the shock adsorbing suspension helps cushion you from the vibrations of a journey, giving you day-long comfort. A fully proportional speed-controller with a speed restriction facility allows you a smooth ,safe jerk-free ride.

VERSATILITY- The multi positional seat which swivels for easy access, together with infinitely variable handlebar positioning, will allow you to set the Scooter to your own individual driving position.

SERVICE- Your **Freerider** Scooter has been designed to be service friendly. Sealed batteries which are virtually maintenance-free will give your **Freerider** the power it requires. Should you need to take you batteries on an aircraft, then you can peace of mind because the batteries are totally spill-free. (Please consult your carrier for details).

SAFETY- The advanced speed controller has been designed with extensive self-checking circuits to give you the maximum 'state-of-the-art' safety technology. Two Fully automatic electronic braking systems together with independent manually operated front wheel brakes gives the driver confidence in any environment. The on/off key can be removed for added security and safety, this disables the electronic drive circuitry, and your Scooter cannot therefore be driven away by any unauthorised person.

CAUTION- Do not switch 'off' the on/off power key when you are moving; this will automatically apply the motor parking brake suddenly and could place you in a dangerous situation. Your Scooter is fitted with anti-tipping wheels. they are an important part of the scooter's design to prevent against backwards tipping on excessively sharp inclines. Do not remove these anti-tipping wheels.

CHARGING- Your Scooter is fitted with a battery level indicator. Charging is straight forward. Your charge is fully automatic and will reduce to a top-up charge mode when the re-charge cycle is complete. (See Batteries and Battery Charging section of this manual).

OPERATING YOUR FREERIDER SCOOTER

Before setting out on your **Freerider** Scooter you need to make sure that your seat is in the correct driving position.

Your **Freerider** distributor will set the seat to the correct height for your individual needs (note: see warnings on page 7&8).

The seat has four basic adjustments to assist your comfort.

1. **Seat Lock Lever :**(Fig 1). This allows the seat to swivel through 360° and lock in a convenient position. The locking lever is located under the left side of the seat. NB: It can be re-located on the right side for your convenience. Pull up fully to release the seat allowing rotation. Release level to lock the seat into the desired position.
   Warning: When driving, the seat should be locked in the straight ahead position.
   Caution: The seat locking level must lock be lifted up fully when rotating the seat, failure to observe this may result in unnecessary wear of the seat post.

   Removing seat from Scooter: The seat mounting post is designed with a special 'one position' lifting point, this will prevent the seat from inadvertently dismounting itself in the case of an accidental upset of the Scooter. The seat can only be demounted by turning the seat 90° to right or left from the forward driving position.

2. **Armrest Width Adjustment:** On each side at the rear of the seat you will find a large black knob (Fig 2). By simply loosening this knob you are able to slide the armrests in or out to whatever width you desire. Re-tighten the knobs fully. You may need a friend to assist you with this initial setting up operation. This may extend the width of your Scooter.
   Caution: The backrest of your seat will not fully fold forwards if armrests are positioned too closely towards one another. **Warning:** Do not drive your Scooter with the arms removed or in the raised position.

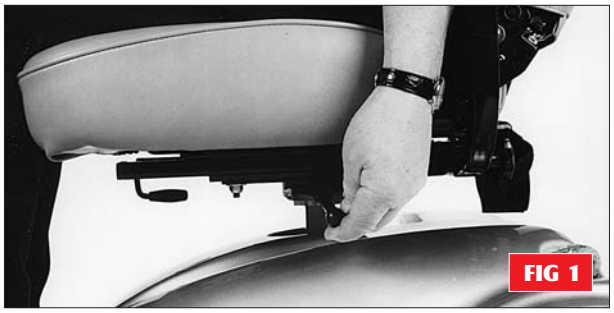
FIG 1

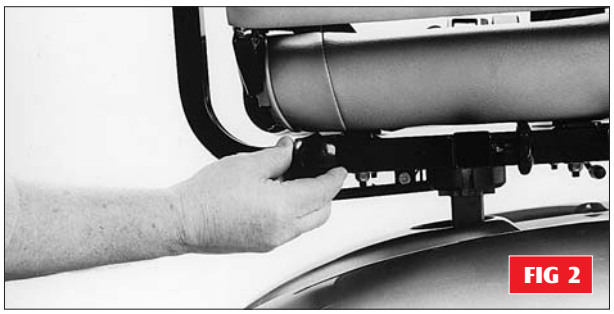
FIG 2

3. **Armrest Angle Adjustment :**(Fig 3). The armrest angle can be adjusted individually to suit your needs. To make adjustments to the armrest angle you will need two 13mm spanners (not provided). Lift the arm upwards, you will note the adjusting bolt. First loosen the locking nut, rotate the bolt in or out until the required angle is found, lower the arm and check the angle for comfort; re-adjust as necessary. Finally tighten the locking nut.
   Warning: When lowering the arm make certain clothing or fingers are not positioned under it.

4. **Seat Slide Adjustment:** (Fig 4).Located on the right front side of the seat. This lever allows you to adjust your seat forwards and backwards when sitting on the seat. Simply pull up the lever and move in the desired position backwards by pushing or forward by hitching. As soon as the lever is released, the seat will lock into the new position.

Caution: Test that the seat has fully locked by hitching backwards and forwards.

Warning: Do not carry out this operation when your Scooter is moving ,first stop apply the brakes and then carry out the seat positioning.

FIG 3

SEAT:

The seat as fitted to your **Freerider** Scooter, has a fold down backrest(see Fig 5).The seat has two height positions. Your **Freerider** distributor will position the seat to allow you the most comfortable driving position.

FIG 4

5. **Seat Height Adjustment:** You may need to alter the seat height setting at a later date, please follow these instructions.
   1. Remove your seat from the Scooter by lifting the seat locking lever and lifting the seat clear of the vehicle (see Fig 1). Note :your seat can only for safety reasons be removed when it is Turned 90˚ to the right or left from the straight ahead driving position. Please take care when lifting heavy weights. Place your seat on a soft clean work area.
   2. With the aid of a 17mm spanner (not supplied) loosen the 10mm seat clamp fixing bolt (see Fig 6).
   3. Remove the 10mm fixing bolt and reposition the bolt into one of the four preferred location holes of the seat mounting tube (see Fig 6).
   4. Re-tighten the 10mm fixing bolt. Refit the seat onto your **Freerider** Scooter. **Warning:** Do not have the seat set too high, you must be able to place both feet firmly on the Scooter's floor area. Stability will be reduced the higher your seat is set on the mounting tube. Always take great care when cornering, lean into the corner to achieve the best stability from your Scooter.

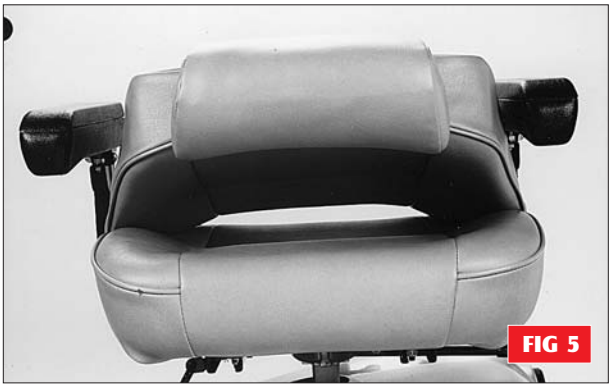
FIG 5

FIG 6

6. **Backrest Angle Adjustment :** For a comfortable driving position the backrest of your seat can be adjusted to one of the four fixed positions by moving the stop bolt located in each side hinge bracket(see fig 7).The left hinge bracket is marked 90˚,100˚,105˚and 120˚with corresponding hole positions. With the aid of a 4mm hexagon key and a9mm spanner(not provided)remove and reposition the stop bolt from each of the two hinge brackets, into the appropriate angled position. Retighten each bolt and locknut making certain the two bolts are located in exactly the same position on either side.

Warning: Both stop bolts must be positioned in the same position for the backrest to be fully supported, failure to observe this warning may distort the backrest frame.

Warning: The rearward stability of your scooter will be reduced the greater the backrest is set past 90˚.Always

FIG 7

take great care when going up steep slopes or kerbs, always lean forward to achieve the best stability for your Scooter. Do not drive up a slope greater than 5° if your backrest is positioned at the 120° position. Failure to observe this warning may put you in a dangerous situation.

7. **Backrest Height Adjustment:** The upper cushion of your backrest (See Fig 8) can be adjustment for height, giving you more back support if you are tall, by operating the small latch at the base of the left hand round support bar. Lift the cushion up or push down for the most comfortable position. The headrest will also lift out for convenience.
8. **Lap Saftery Belt:** Your Scooter seat is fitted with a safety belt to prevent you from slipping forwards under braking conditions or when going sown a slope or over obstacles, always us it-even for short journeys.

   The lap belt can be adjusted on one side to fit comfortably around your waist. To fit simply connect the two buckles together(see fig 9)until a distinct 'click' is heard. To remove simply 'press' the red buckle and the two belts will separate. **Caution:** Care should be taken when the belt is not in use, it should be connected together and placed in the centre of the seat cushion. Failure to observe this notice could lead to the two buckles falling onto and damaging the bodywork, catching a person or foreign body.

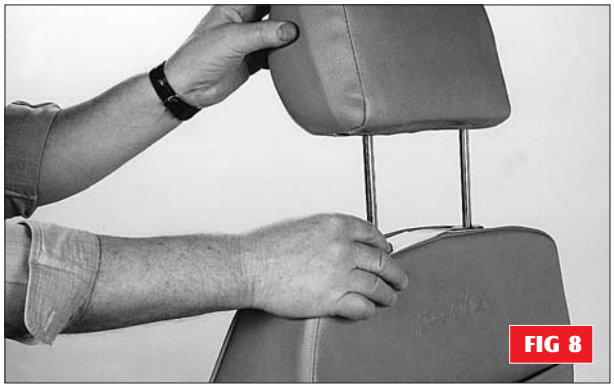
FIG 8

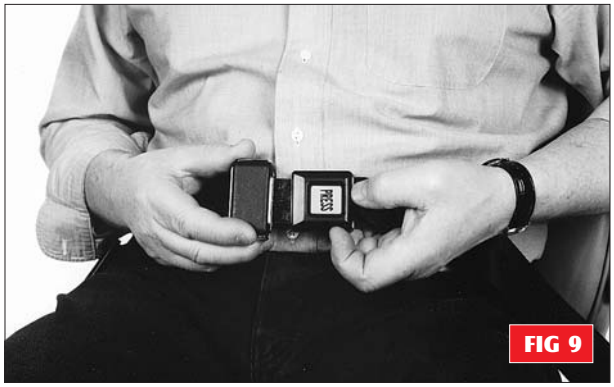

FIG 9

FIG 10

HANDLEBAR ADJUSTMENT

The handlebar of your Scooter is designed to allow you to position it in a comfortable driving position. It can be locked into numerous positions or unlocked to move freely for transportation.

The handlebar lock is operated by a black lever positioned on the right hand side of the handlebar (see Fig 10). To release the handlebar from a locked position pull the black lever upwards, the handlebar will now move freely, but under mild tension.
To lock the handlebar into a comfortable driving position, simply push the black lever downwards until the handlebar is locked firmly into position.
With the combination of the height adjustment together with the handlebar movement, you should find a suitably comfortable driving position.

Warning: Always make certain the handlebar locking lever is fully down and the handlebar is securely clamped onto the chrome support plates before driving your Scooter. For service adjustment of this part, refer to the Care and Maintenance section of this manual.

CONTROL FEATURES

Your controls are located on the handlebar console (see Fig11) they are:

1. **Speed Adjustment Dial:** This allows you to pre-select you desired top speed. The dial is proportional to speed and can be set anywhere between 'min' and 'max' increments. Turn the dial knob anti-clockwise to minimum for a very

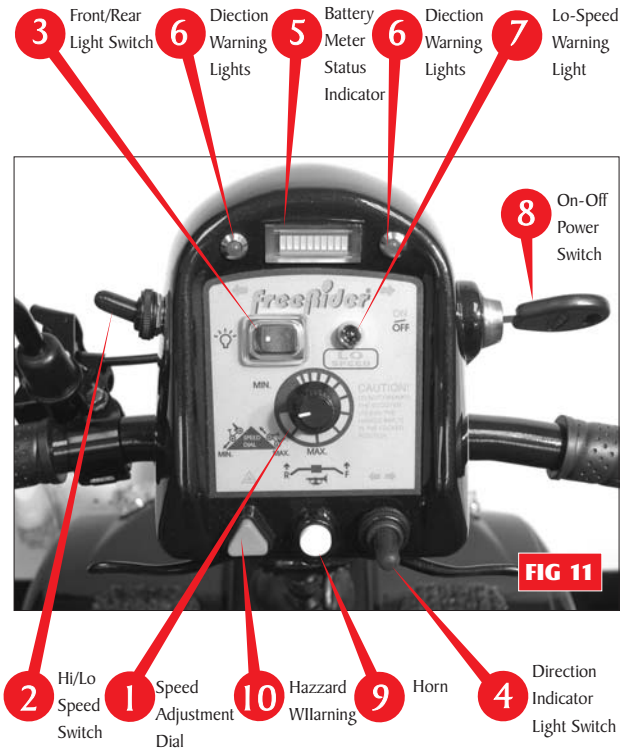

FIG 11

gentle operation, and clockwise towards maximum to increase your speed. **NOTE:** When attempting to climb obstacles, you will need to set the dial to a high setting. Remember the higher position you set your speed dial to, the faster your Scooter will travel. Caution: The speed adjustment dial(1)works in conjunction with the Hi/Low speed switch (2),if both are set to their lowest settings there may not be sufficient power delivered to the motor to drive your Scooter, in this case turn the speed dial up to a higher setting.

2. **Hi/Lo speed Switch:** Located on the left side of your console this switch controls the maximum high (Hi) and low (Lo) speed range for your **Freerider** Scooter. When riding on the pavement or in shopping areas the low 4mphspeed range must be engaged, this is a lega requirement and must be adhered to at all times.When the low speed range is chosen a 'red' warning light (see fig 11 No.7) will illuminate. The Hi/Lo speed range switch can be operated while the Scooter is in motion.

   Please note the Hi/Lo speed swith works in conjunction with the speed adjustment dial (see fig 11 No.1) and the forward/reverse speed lever; the speed dial must be set to it's highest setting for maximum speed in both Hi and Lo speed settings.

3. **Front/Rear Light Switch:** This rocker type switch controls the function of the front and rear lights. Simply push down on the left side for 'on' and the right side for 'off'.

4. **Direction Indicator Light Swithc:** Located at the bottom right of your console, the direction indicator lights for right and left manoeuvers are controlled by this switch. When making a turning manoeuvre on the road the appropriate switch direction should be made. Simply, when turning right 'flick' the switch to the right, you will note a warning 'bleeper' is audible and the appropriate direction warning light (see fig 11 No.6) Will flash. To cancel the direction indicator return the switch to the centre position. The left direction indicators are activated by 'flicking' the switch to the left. **Caution:** Please note the direction indicators are not self-cancelling.Warning: Please be aware to test the function of your direction lights before each journey. Failure to observe this warning could put you and other road users into a dangerous situation. If in the event a direction indicator bulb fails, you will note the direction warning light (see fig 11 No.6) on your console flashing quicker than normal, in this situation the appropriate bulb should be substituted.

5. **Batter Gauge/Status Indicator Light:** Located at the top of your console. This is a 10 bar segmented colour illuminated display which indicates when your Scooter is switched on, it also displays the status of the batteries, the speed controller and the Scooter's electrical system.

   'Battery Gauge': When your Scooter is switched on, after half a second, the coloured bars will illuminate to show the level of charge in your batteries. If the batter gauge displays red, yellow and green your batteries are fully charged and you are ready to drive. As the power is used up in your batteries the bar indication will move towards the red sector indicating the state of charge at thaat precise time.

   If the batter gauge displays red and yellow, then your batteries have lost charge and they should be recharged as soon as you can, but you will still have power to spare. When the battery gauge falls into the red sector, either steady or flashing slowly, then you should charge your batteries without delay.

   It is not recommended to drive your Scooter regularly with the batter charge indication in the yellow to red sector, as this will shorten batter life. It is wise to re-charge your batteries after each journey especially as it enters the yellow to red sectors of your battery gauge(see Batteries and Battery Charging section of this manual) Note:When driving up steep slopes or similar obstacles your Scooter's motor will be working hard, the battery gauge may move towards the red sector, it will recover towards the green sector once the load on your motor is reduced, this does not indicate low batteries.

   'Status Warning Indicator': When you turn your **Freerider** Scooter on, after half a second the battery bar gauge will illuminate at a constant rate indicating the state of charge level in your batteries. The battery bar gauge is connected to a very sophisticated diagnostic system which can identify faults should they occur on the main speed control system or some other part of your Scooter's electronic drive system .If in the unlikely event a fault should occur with your **Freerider** Scooter you can find out what has happened by counting the number of bars that are flashing on the battery gauge. For instance if your batteries run low on power, the status indication will flash slowly one bar, indicating that the batteries need recharging or that there is a poor connection to the batteries. The Battery Status Bar Gauge detects 8 similar fault diagnostic signals, reference to these diagnostic codes is found under 'Basic fault finding' on page31.

6. **Direction Warning Light:** This green light will illuminate when the direction indicator switch is activated to the right for a right turn and to the left for a left turn. The light will also flash at a higher rate than normal to indicate a bulb failure in one of the front or rear direction lights.

7. **4m.p.h. Lo Speed Warning Light :** This red light will illuminate when the Hi/Lo speed switch is engaged in the slow speed position, see also point No.2 above -Hi/Lo speed switch.

8. **On-Off Power Switch:** Located on the right side of your control console. Insert the key and turn clockwise .This controls the power to your speed control system. You will note that after half a second the battery condition gauge will illuminate with a solid light. Your Scooter is now ready to drive. To switch off your Scooter turn the key anti-clockwise. Remove the key when your vehicle is left unattended. **Caution:** Do Not switch to 'off' when your Scooter

is moving. Failure to observe this warning will result in the motor brake being applied suddenly and placing you in a dangerous situation.

You should only switch 'off' when in motion in the case of an emergency. Continual use in this mode may cause undue stress to the drive system and damage the main electronic speed control unit.
Be extremely cautious on slopes. Sit upright in your seat or your machine could become less stable.

Sleep Time: When you rest your **Freerider** Scooter with the electronics switched 'on' you are using valuable battery power. Your **Freerider** Scooter will automatically go into a sleep mode to preserve battery energy after approximately 15 minutes. To start your Scooter again simply switch the key to 'off' and back to 'on' again, your Scooter is now ready to go.

9. **Horn Button:**(Yellow) Positioned in the bottom centre of your console, press to sound a warning to other road users.
10. **Hazard Warning:** Positioned to the bottom left of your console, when pressed this red triangular button activates all of the amber fashing direction lights to warn other road users that you are stationary or in distress. This function should only be used in emergencies. You will not that both green direction lights at the top of your console are flashing to warn you the hazard system is in operation. To cancel the hazard warning simply press and release the red triangular button.

FORWARD-REVERSE SPEED AND BRAKING LEVER

Located under the handlebar grips (fig 12).Your speed and braking in forward and reverse motion is controlled here. The right lever moves your **Freerider** Scooter in a forwards direction and also controls the rate of speed by the

FIG 12

proportional amount of pressure applied. The left lever moves the Scooter in a reverse direction and controls the rate of speed by the pressure applied. The lever when released will automatically return itself to the neutral braking position, and you will slow down and gently stop. The rate at which you brake is also proportional to the movement of the control lever, the quicker you return it to the centre position the harder you will brake. Your Freerider distributor can modify your Scooter if you require so that the left hand lever will give you forward speed direction and the right hand lever will give you reverse speed direction.

Warning: Do not attempt to operate the right and left lever simultaneously, failure to observe this warning may distort the lever system and could put you at risk. It should also be noted that reverse speed is set at half of full speed, this is a safety precaution, always make certain the Hi/Lo speed switch and the 'min and max' speed selection dial are set high enough to give you adequate power for your reverse manoeuvre.

Warning: If you are not an accomplished outdoors powered vehicle driver, we strongly recommend that you seek advice from your local 'road safety officer' who may be able to advise you of any training schemes that are available in your locality, your local Freerider Distributor may also help you in finding training in road craft skills.

We strongly recommend that you first practice in an open, safe area, free from traffic, preferably with a companion who can assist you .Please remember as a road user you are required by law to drive your Scooter with due care and regard to other road users and pedestrians. Although you do not by law require a driving licence, road tax, M.O.T. Test or insurance, we strongly recommend that you insure yourself and your Scooter against any risk that could occur, your Freerider Dealer will advise you of insurance companies who specialise in this field or you could seed advice from your own insurance company who provide other cover for you such as house insurance.
We also bring your attention to the 'Code of Practice for Class 3 Vehicle Users' this can be found on page 37 of this manual.
Warning: Do not attempt to drive your **Freerider** Scooter until you have read and understood all of the details in this users instruction manual, failure to observe this manual may place you in a dangerous situation.

MANUAL EMERGENCY BRAKE

Located on the left side of the steering handlebars(see fig 13).The lever when pulled towards you operates two front drum brakes. This manual braking system works independently of the main electronic braking system and must only be used in an emergency situation, for instance if the drive transmission becomes disconnected for reasons of convenience to push you Scooter.
To operate the manual brake simply squeeze the lever towards the handlebars, the harder you squeeze the more pressure will

FIG 13

be applied to the brakes. **Warning: Remember the manual brake is connected to the front wheels only, when applied at high speed brace the handlebars to prevent steering wander.**

The brake lever for convenience can be locked in the 'brake applied' position. To permanently lock the lever on, simply apply the brake and flick down the 'locking latch' (see fig 14) which is situated at the pivot end of the manual brake lever. To release the lever simply squeeze the 'manual brake lever' and the locking latch will automatically release.

Warning: Do not drive your Freerider Scooter with the manual brake applied. Failure to observe this warning will overload your Scooter's drive motor and drain your batteries of power, this action could result in permanent damage to the motor, batteries and brake components. See also 'Manual Brake Adjustment' on page 30 of this manual.

FIG 14

FREEWHEELING YOUR SCOOTER

If for the reasons of convenience, you require to push your **Freerider** Scooter for a short distance, the drive system can be put into 'freewheel mode'. This will allow your Scooter to roll freely.

SCOOTER FREEWHEEL PROCEDURE

The freewheel device is a red lever located at the rear right hand side of your Scooter (fig 15).To freewheel your Scooter first switch off the power switch located on the Scooter's control console (fig 11). Pull up the red lever (fig 15) until a distinct click is felt. You can now push your Scooter with ease. Please note, in this mode with the power switch in the off position, the braking safety system is automatically activated when the Scooter is pushed quicker than walking speed, this is an automatic 'run away' safety checking system, it also reduces the risk of casual theft.

By switching on the console power switch at this stage you will introduce some heavy motor braking, you will note that nine bars on the console battery gauge are flashing. This indicates that your Scooter is in a freewheel mode and you cannot drive your Scooter. Note, the quicker you push your Scooter the heavier the brake will be applied.

To re-engage the drive system, simply push down the brake until a distinct click is felt, Switch the power switch on your console off and then on, the battery gauge light will be fully illuminated and you will be able to drive your Scooter once again.

Warning: Do not sit on your **Freerider** Scooter with the freewheel device in the disengage position. Your **Freerider** Scooter will not drive in this mode , the bar status light on your console will flash nine bars.

Warning: If your **Freerider** Scooter is in the freewheel mode when you turn on your power key switch and depress your speed forward-reverse lever, you will not be able to move under motor power ,Dismount and re-engage the drive system by pushing the red freewheel lever down.

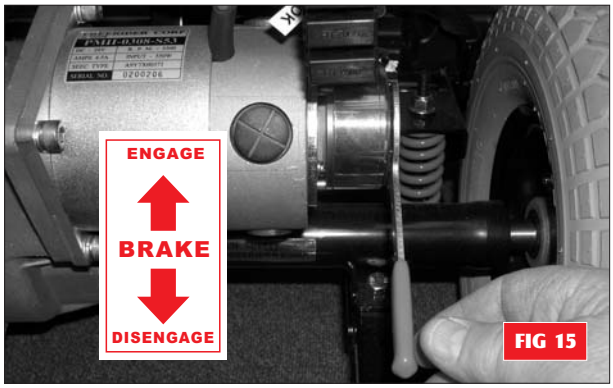

FIG 15

Remount your Scooter, switch the power switch off and on again until the battery gauge fully illuminates, your Scooter will now drive under motor power again.

Warning: Always check that the freewheel device is in the drive position before attempting to drive your Scooter after it has been left unattended for a period of time. **Failure to observe this warning may result in an accident.**

General note: If you are able to push your Freerider Scooter the drive system is disconnected. **Do not attempt to drive your Scooter.** Please check once again the afore mentioned procedure for re-engaging the drive.

Warning: If your batteries are disconnected from your Scooter there will be no brake function in the freewheel mode. Do not leave your Scooter unattended in this situation as it could roll away causing damage to other parties or property. Always re-engage the drive system when left unattended.

Warning:
Yellow warning notice situate on the cover at the rear of you Scooter.

⚠ WARNING
EMERGENCY FREEWHEELING DEVICE
NEVER SIT ON YOUR SCOOTER WITH THE FREEWHEEL DEVICE IN THE DISENGAGED POSITION. ALWAYS RE-ENGAGE THE EMERGENCY FREEWHEELING DEVICE AFTER USE. FAILURE TO COMPLY WITH THIS WARNING MAY RESULT IN INJURY.

Please take extreme care

SAFETY INSTRUCTIONS & WARNINGS

GENERAL

Warning: Do not attempt to operate your new Freerider Scooter for the first time without completely reading and understanding all of the facts in this Users Instruction Manual.

Your **Freerider** Scooter is a state-of-the-art device designed to enhance and increase your mobility. Freerider provides a range of Scooters to best suit the individual needs and circumstance of the Scooter user.

Please be aware that the final selection and purchasing decision regarding the model of Scooter to be used is the responsibility of the Scooter user who is capable of making such a decision with assistance from his/her healthcare professional (i.e. medical doctor, physical therapist etc.)

The contents of this Users Instruction Manual are based on the expectation that the mobility device expert has properly fitted the Scooter to the user and has assisted the prescribing healthcare professional and/or the authorized **Freerider** Distributor in the instruction process for the safe use of the scooter.

There are certain situations, including some medical conditions, where the Scooter user will need to practice operating the Scooter in the presence of a trained attendant. A trained attendant can be defined as a family member or care professional specially trained in assisting a Scooter user in various daily living activities also seek advice from your local Road Safety Officer and disability groups.

When you begin to use your **Freerider** Scooter, you will probably encounter situations in which you will need some practice. Simply take your time and you will soon become confident and in control as you manoeuvre through doorways, on and off elevators, up and down ramps and over moderate terrain. Below are some tips, precautions and other safety measures that will help you to become accustomed to the safe operation of your **Freerider** Scooter.

SAFETY CHECK

Get to know the feel of your **Freerider** Scooter and it's capabilities. **Freerider** recommends that you perform a safety check before each use to make certain your Scooter operates smoothly and safely. For details on how to perform these necessary inspections, see the Care and Maintenance section of this manual. Perform the following inspection prior to using your **Freerider** Scooter.

- Check tyre inflation, Rear tyres maintained at 35 p.s.i.(2.5 bar) Front tyres maintained at 30 p.s.i.(2.1bar).
- Check all battery connections, making certain they are tight and not corroded.
- Check batteries have been fully charged
- Check operation of brakes
- Check operation of all lights

Warning: It is critical that the pressure in the pneumatic tyres is maintained at all times. Failure to observe this warning may result in a serious failure of the tyre or wheel, causing serious personal injury and/or damage to your Scooter.

SOLID TYRE INSERTS(PUNCTURE PROOFING)

Your **Freerider** Scooter is fitted with pneumatic tyres(air) as standard equipment, the pneumatic quality and feel of these tyres greatly enhances the ride quality of your Scooter. We do not recommend the fitting of solid inserts to replace the air pressure in your wheels, these products add unnecessary weight and place more stress on the suspension components of your Scooter. If puncture resisting security is desired then use an appropriate liquid sealer, your **Freerider** Dealer can advise you on these systems.

Warning: Do not carry passengers on your Scooter. Your Scooter is designed for a single occupant which complies with legal requirements for pavement vehicles. Carrying passengers on your Scooter may result in personal injury and/or property damage.

WEIGHT LIMIT

Your **Freerider** Scooter is designed for a maximum user weight limit of 160kg (350lbs)FR510DXs2b/ 277kg(500lbs)FR168-3X/FR168-3Xs/ FR510DXX/FR510DXXs /FR510DXXsb.

Warning: Exceeding the weight limit will void your warranty and may result in personal injury and damage to your scooter. **Freerider** will not be held responsible for injuries and/or property damage resulting from failure to observe these weight limitations. Please also remember when carrying heavy objects that this will increase your weight and may make your Scooter unstable.

CORNERING

Excessively high cornering speeds can create the possibility of tipping. Factors which affect the possibility of tipping include, but are not limited to, cornering speed, steering angle (how sharply you are turning), uneven surfaces, inclined surfaces (such as heavily cambered pavements), riding from an area of low traction to an area of high traction (such as passing from grass areas to a paved area - especially at high speed while turning), and abrupt directional changes. Do not corner at high speed! If you feel that you may tip over in a corner, reduce your speed and steering angle to prevent your Scooter from tipping.

Warning: When cornering sharply, reduce your speed. When using your Scooter at higher speeds, anticipate changes in the road surface. This will greatly reduce the possibility of a tip or fall. To avoid personal injury or property damage, always exercise common sense when cornering.

It is always advisable when cornering to lean towards the corner, just as you would on a bicycle, this will enhance the sideways stability of your Scooter.

BRAKING

Your **Freerider** Scooter is equipped with one powerful electronic brake systems, and an emergency manual system:

1. Regenerative: Uses the electricity generated in your Scooter drive motor to rapidly slow your Scooter when the speed direction lever is returned to the centre (neutral drive)stop position; and
2. Disc Park Brake: Located on the end of your drive motor it activates mechanically after the regenerative brake slows your Scooter to a near stop, or when power is removed from the drive system for any reason, as in the case of switching your machine off!
3. Mechanical (Emergency) Brake: Two drum brakes positioned on the front wheels can be activated by the lever positioned to the left hand side of the handlebars (Four wheels only).The brakes are operated by squeezing the lever for emergency braking, as in the unlikely event of transmission failure.

GENERAL Brake engagement is far more abrupt at higher speeds. It is important that you anticipate when the brakes will engage and that your are braced for the resulting deceleration. Practice braking on level ground to understand your braking distance time.

Warning: Your Scooter can decelerate very quickly. Do not decelerate or turn abruptly when travelling at high speed unless absolutely necessary. If it is necessary to decelerate or turn abruptly when driving at high speed, brace yourself by gripping the steering handlebar tightly and positioning your feet firmly on the floorboard. Users who cannot grip the handlebar tightly and/or place their feet firmly against the footboard should avoid deceleration from or turning abruptly at high speed, and therefore should avoid travelling at high speed. Failure to observe this warning could result in serious personal injury and property damage. Always brace yourself firmly when decelerating your **Freerider** Scooter.
Never drive down slopes at full speed, always adjust your speed to the driving condition and allow for gradual descents on inclines. Note: when descending a slope it is good practice to switch your Scooter into the 'Lo(4mph) speed range, this can be activated while you are driving.

OUTDOOR DRIVING SURFACES

Your **Freerider** Scooter is designed to provide optimum stability under normal driving conditions i.e. dry, level surfaces composed of concrete or asphalt. However **Freerider** recognizes that there will be times when you will encounter other surfaces such as packed soil, grass and gravel. These surfaces may not be sound and fail to give good traction, caution should be considered before driving on this tyre of surface to prevent stability problems resulting in injury or damage to your Scooter.

- Reduce your Scooters speed to the 'Lo' switch position when driving on uneven terrain or soft surfaces.
- Avoid long and unsafe grass that can become tangles in the running gear or may hide debris and holes.
- Avoid loosely packed sand and gravel.
- If you feel unsure about a driving surface, **please anticipate and avoid that surface.**
- Always avoid kerbs if possible use 'cut-outs' in pavements.

STREET AND ROADWAY DRIVING

Warning: Your **Freerider** Scooter has not been designed for operation on public streets and roads. It is designed for operation on pedestrian pavements and traffic free shopping areas.

Your **Freerider** Scooter must be driven with due care and compliance with the Road Traffic Acts and conditions of the Highway Code. Always obey all local pedestrian traffic rules. Wait until your path is clear of traffic, and then proceed with extreme caution. Note: Always wear light or illuminating clothing when driving your Scooter. Be aware that it may be difficult for traffic to see you when you are seated on your Scooter. Only drive your Scooter on the pavement at the 'Lo' 4mph(6km) speed range, it is illegal to drive your Scooter over 4mph in areas where pedestrians walk, i.e. Shopping areas, crossings, under passes, parks etc.

WARNING BEACON

A warning beacon must be fitted and illuminated if you drive on an unrestricted dual carriageway i.e.a carriageway that allows speeds of over 50mph. We do not recommend that you drive on these roads and advise you to choose an alternative route, avoid fast moving traffic at all times.

INSURANCE

Although at this moment in time it is not a legal requirement for accident insurance cover (third party), it is a sensible precaution. Your **Freerider** Authorized Agent will be able to give you details of specialist insurance companies or you own insurance company will be able to advise you.

WEATHER PRECAUTIONS

Warning: **Freerider** recommends that you do not operate your Freerider Scooter in icy or slippery conditions or on salted surfaces i.e. Roads and Pavements etc. Such use may result in accident, personal injury or adversely affect the performance and safety of your Scooter.

Warning: **Freerider** recommends that you do not expose your Scooter to any tyre of heavy moisture at any time i.e. rain, snow or power washer. Such exposure can damage your Scooter. Never drive through deep water or expose your Scooter to sea water. Note: salt is very corrosive to metal and electronic components. Following use in winter or exposure to sea sand and water, your Scooter should be washed with a

Mild soap and water to remove all ingress of salts. **Do not** use a power hose. **Do not** operate your Scooter if it has been exposed to moisture until has been thoroughly dried out.

Warning: If your Scooter is fitted with a canopy (cab) avoid gale force winds i.e. Winds above 61km/h (38mph), avoid exposed areas near to water.

FREEWHEEL YOUR SCOOTER

Your Scooter is equipped with a manual freewheel device for convenience when you need to push it. See the Freewheeling your **Freerider** Scooter section on page 12 of this manual.

Warning: **Do not** use your Scooter in the freewheel mode without an attendant present. Personal injury may result.

Warning: **Do not** attempt to personally place your Scooter in freewheel mode while seated on it. Personal injury may result. Ask an attendant for assistance if necessary.

Warning: **Do not** place your Scooter in freewheel mode while on an incline. The Scooter could roll uncontrollably on its own, causing personal injury.

TYRE INFLATION

If your Scooter is equipped with pneumatic tyres, you should check their condition on a daily basis. Have the tyre pressure checked and if necessary inflated to the recommended pressure at least once a week .This can be found on page34 under 'Technical Specification'. Properly inflated tyres will help ensure a smooth, stable ride with minimum rolling resistance for your motor, it will also prolong the tyre's life and resistance to punctures.

Warning: Always inflate your tyres from a regulated air source. Over inflation from an unregulated air source could over inflate your tyres resulting in "blow out" or personal injury. **Do not** over inflate your tyres to the maximum inflation pressure indicated on the tyre cover, failure to observe this warning could damage your Scooter wheels. Your tyres are designed for low speed use on pavements and roads. They are not for high speeds, such as in vehicles designed to travel at speeds in excess of 15 mph.

MOTOR VEHICLE TRANSPORTATION

Currently there are no standards approved for "tie down" systems in a moving vehicle of any tyre to transport a person while seated in a Scooter.

Although your Scooter may be equipped with a positioning belt *, this is not designed to provide proper restraint during motor vehicle movements.

Anyone travelling in a motor vehicle should be properly secured in the motor vehicle seat with a safety belt fastened securely.

Warning: **Do not** sit on your Scooter while it is in a moving vehicle. Personal injury may result.
Warning: Always make certain that your Scooter is properly secured when being transported. Failure to comply may result in personal injury and/or damage to your Scooter.

POSITIONING SAFETY BELT

Your **Freerider** Scooter is fitted as standard with a positioning safety 'lap' belt. It is a legal requirement for Class 3 vehicle riders to wear this belt.

Warning: Wear your seat belt at all times, make certain it is adjusted and fastened securely. Serious personal injury may result if you fall from your Scooter (see page9)

ACCESSING YOUR SCOOTER

Getting on and off your Scooter requires a good sense of balance. Please observe the following tips when getting on or off your Scooter:

- Make certain your **Freerider** Scooter is switched off at the power switch, and the power key is removed.
- Ensure your Scooter is not in the freewheel mode (see page 12 Freewheeling your Scooter)
- Make certain the seat and handlebars are locked firmly into position.
- The seat armrests can be lifted up to make access easier. Make certain you do not attempt to drive with the armrests raised.

Warning: Position yourself as far back into the Scooter seat as possible to prevent tipping and causing injury.

Warning: Avoid using the armrests for weight bearing purposes, such use may cause the Scooter to tip and cause personal injury and/or damage to the Scooter.

Warning: Avoid putting weight onto the steering handlebars, such use may cause the Scooter to tip and cause personal injury and/or damage to the Scooter.

Warning: Avoid putting all of your weight onto the footboard, such use may cause the Scooter to tip and cause personal injury.

Warning: Do not hang bags over your steering handlebars, such use may cause your scooter to drive out of control and may cause personal injury and/or damage to the Scooter.

MODIFICATIONS

Freerider has designed your Scooter to provide maximum mobility. A range of accessories are available from Authorised **Freerider** Agents, to further customise your Scooter needs. However, under no circumstances should you modify, add, remove or disable any feature, part or function of your machine.

Warning: Failure to observe this warning may result in personal injury and/or damage to your Scooter.

INCLINES

More and more modern buildings are designed with disability access in mind. Ramps have specified percentage of inclination, designed for easy and safe access. Some ramps may have turning switchbacks (180 degree turns) that require you to have good cornering skills on your Scooter.

- Proceed with extreme caution as you approach the downgrade of a ramp or other incline, sit right back in your seat, brace your arms on the handlebars and your feet on the floorboard
- Take a wide arc with your **Scooter's** front wheels around tight corners, your rear wheels will follow preventing you from cutting the corner short and bumping or getting hung up on raised kerbs.
- When descending an incline keep your speed adjustment set to the slowest speed setting to ensure a safely controlled descent and driving in a forward direction only. If your Scooter descent is quicker than you anticipated allow the Scooter to completely stop, then progress at a slower speed setting.

Warning: Never drive down an incline at full speed.

- When climbing an incline, try to keep your Scooter moving, if you must stop, start up again slowly and then accelerate smoothly with caution. Avoid sudden stop starts, lean forward towards your handlebars to increase stability and prevent rearward tipping.

Warning: When climbing an incline, do not zig-zag or drive at an angle up the face of the incline. Drive your Scooter smoothly up the incline without stopping, this greatly reduces the possibility of a tip or fall.

Warning: You should not travel over a potentially hazardous incline i.e. areas covered with ice or snow, cut grass or wet leaves or any unstable surface.

Warning: Do not overload your Scooter at the rear when climbing an incline. Always lean forward to provide the best stability and prevent rearward tipping.

Warning: Any attempt to climb or descend an incline steeper than shown in the Scooter Specification at the rear of this manual may put your Scooter in an unstable position and cause it to tip, resulting in personal injury. See also Control on an Incline page19.

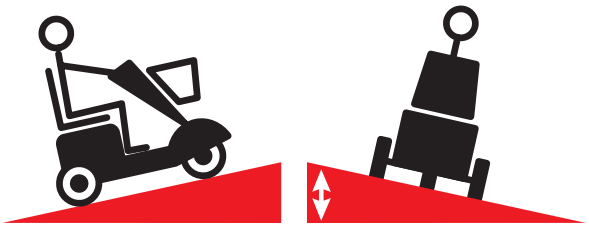

STAIRS AND ESCALATORS

Warning: Scooters are not designed to travel up or down stairs or escalators. Always use an elevator. Failure to observe this warning may result in injury to yourself and others and damage your Scooter.

PREVENTING UNINTENDED MOVEMENT

Warning: If you anticipate being seated in a stationary position for an extended period of time turn off the power key switch, this will prevent unexpected motion due to inadvertent movement of the direction control lever. Failure to observe this warning may result in personal injury. Note: your Scooter electronics incorporate a 'sleep' time mode following fifteen minutes of inactivity your Scooter will automatically switch itself off. To start again simply switch your Scooter off, then on again.

DISPOSAL OF ELECTRO-MOBILE SCOOTER

In time when your Scooter becomes unusable it must be disposed of in accordance with the laws implemented at that time. For further information regarding the recycling arrangements for this tyre of vehicle and its batteries, contact your local authority or government department, details of this can be found in your telephone directory.

ALWAYS TAKE CARE AND BE SAFE

SAFETY WARNING & INSTRUCTION LABELS

The following labels are positioned on your Freerider, they communicate important warnings or instructions regarding the safe operation of your scooter. Please familiarize yourself with their location.

Control console label

Located on the top of the Scooter's rear cover (under seat)

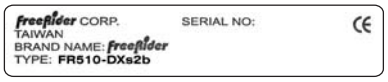

Data serial plate located on front wheel cross member

Located on right of handlebar cover

Located on front wheel cross member

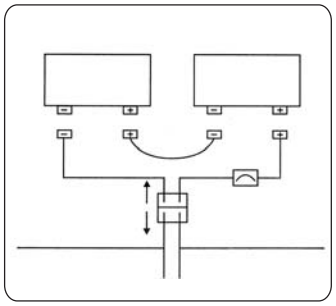

Wiring diagram for batteries located under rear cover

Located at the left or right hand rear cover of Scooter

Located at right rear of handlebars near charging socket

Located on the top leftside of the rear cover (under seat).

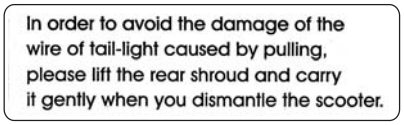

Yellow label located on the top of the rear cover

LEARNING TO GET ABOUT

Warning: If you are not an accomplished outdoors mobility product driver, we strongly recommend that you first practice in an open area, free from traffic and preferably with an attendant who can assist you.

MOUNTING

For your first drive make certain that you and your new **Freerider** Scooter are on a level surface. Put the power on/off key into its slot, but leave it turned off. Stand behind the Scooter's seat, and reach down to the 'Seat Lock Lever'. It will be on the left side directly under the armrest. Grasp the 'black' knob on the lever and pull up, releasing the Seat (fig 16 page18). It will now turn easily to meet you. If need be, you can lock the seat into position to make it steady before you sit down. You can also lift up the armrest to assist this procedure. Seat yourself and swing the seat to face the handlebars. Make sure you are straight, then release the spring assisted lever, making certain that it locks your seat firmly in position.

Next, turn the 'Speed Adjustment Dial' to minimum (min) and the Hi/Lo switch to (Lo), turn the 'on/off' key to 'on'. (The battery state indicator will illuminate). Gently operate the right control lever (see fig12 page 11) to start you in a forward direction .To stop simply release the lever, the brakes will be automatically applied.

Note: When first switching your Scooter on, the electronic system requires time to automatically run a safety check. If you move the forward/reverse control lever during this process your Scooter will not operate. Simply switch your Scooter 'off' and the 'on' again with the key switch to commence driving.

Warning: Please take care not to have your thumb on the forward/reverse control lever when you switch 'on' your Scooter; this will result in your machine going into a fault mode. Switch 'off' then 'on' again to clear the fault.

Warning: If your Scooter has been adapted for left hand, forward operation then this procedure will be reversed: i.e. pressing with the left control lever for forward direction and the right control lever for reverse direction.

DISMOUNTING

Always switch off your Scooter before dismounting. Locate the seat lever and pull up . Now you can swing the seat lock it, and ease yourself onto your feet.
If you prefer you can swing the armrests back to allow you to pivot on your seat and then ease yourself onto your feet.
Caution: Do not use the handlebars as a crutch to lever yourself out of your seat. Failure to observe this warning may damage the handlebar mechanism and make the Scooter unstable.
Warning: Always keep the seat locking lever pulled fully up when rotating your seat, failure to observe this warning will result in permanent damage to the seat post structure.

PARKING IN PUBLIC

If you need to park and leave your **Freerider** Scooter, simply remove your key. This will keep the brake on and make your Scooter difficult to move. It is best to leave it in sight of someone like a store assistant etc. who can watch it for you. Another precaution is to you're your serial number and the date of purchase.
Your serial number can be found on a plate attached to the front wheel cross member located under the body cover.

BASIC DRIVING

Make certain you are comfortably seated on your Scooter and both armrests are down. Ensure that the 'Speed Control Dial' and 'Hi-Lo' switch are set to minimum for your first drive. When you have become more confident you can increase the setting to a higher speed. Push the right speed control lever (Fig 12, page 11) slowly, you will very gently move forwards. Release the lever, and you will gently stop. Practice these two basic functions until you get used to them.

Steering the Scooter is easy and logical by turning the handle bars in the direction you wish to manoeuvre. Be sure to remember to give a wide clearance when turning so that the rear wheels follow the path of the front one, instead of cutting short.

Cutting short on pavement corners or 'cut outs' can mean that a back wheel will go off the pavement, causing a stability problem. Avoid this at all times by steering an exaggerated wide arc around the obstacle.

If you must steer in a tight spot, such as entering a doorway or when turning around, stop, turn the handlebars to where you want to go, then apply the power gently. This will make the Scooter turn sharply. It will still go gently, and with complete stability. Practice in an open area, until you are proficient. Please remember that your **Freerider** Scooter is a long vehicle, please take this into consideration when making a turning manoeuvre. In some circumstances you may need to make several manoeuvres to completely change direction i.e. Three point turn.

Reversing requires attention. Be sure your 'Speed Adjustment Dial' and 'Hi-Lo' switch are set to minimum before you reverse, push the left thumb reverse control lever (Fig 12, page 11). Remember, when you reverse you have to steer in the opposite direction to the way you want to go. Practice is required here, again use that open space. Please note as a safety requirement reverse speed is half of forward speed.
Note: If your Scooter is set up for left forward driving the afore mentioned description is reversed. Also note when driving in reverse the speed dial may need to be set towards 'max' to allow sufficient power to your drive motor, failure to note this warning may 'stall' your Scooter.

REMEMBER: If it is a tight turn, turn your steering column before applying power. Steer wide of all corners and obstacles, please move slowly and with care.

Warning: Do not turn your 'on-off' power key switch to the 'off' position when your Scooter is in motion,this will apply the motorbrake. Failure to observe this warning may irreparably damage the main electronic speed control unit or drive transmission. Always first slow your Scooter down to a stationery position before you switch your Scooter off.

CONTROL THROUGH TIGHT SPOTS

When you start using your Scooter you will meet some obstacles that will require some practice to drive through smoothly.
Here are some common problems, with tips that will help you master them quickly. You will soon be in control through doors and up and down ramps with surprising ease by following these tips.

CONTROL THROUGH DOORS

Approach an unfamiliar door slowly, sizing it up. Does it have a knob or push bar? Does it open toward you or away? Think in terms of using the power of the Scooter to do the work for you! You need not strain. Remember your Scooter is a wide vehicle.

Hold the doorknob or bar in one hand and apply power with the other hand. If the door is self closing, you can go through, allowing the door to close behind you, if you go quickly enough. If not, just stop when you're clear of the door and push it closed.

If the door opens toward you, hold the knob or bar with one hand and gently let the reverse power do the work. When the door is open wide enough, go ahead quickly, leaving the hand on the door to keep it free of the Scooter and letting go as you pass the doorjamb. It is an easy technique. Practice makes perfect. Remember - your Scooter can do the work without wearing you out!

Going through doors, with the back wheels: If you're not moving, your rear wheel is probably caught. Reverse and try again. Take your time - relax - enjoy yourself.

Caution: Remember your **Freerider** Scooter is a large vehicle and in some situations it may be too long or wide to manoeuvre through some doors or walkways.

CONTROL ON AN INCLINE

More and more buildings have ramps for wheelchair access. Some have a change of direction in the middle, and good cornering is required.

Make a wide manoeuvre with your front wheel around tight corners, so that your back wheels follow a wide arc to stay clear of the corner.

If you stop while facing uphill, the automatic parking brake will hold you safe. To start again, slowly operate the forward direction lever, the parking brake will release and you will start to move.

Going down the ramp, keep your speed slow. This will keep you in a safely controlled descent. If you wish to stop completely, release the control lever, and you will come to a gentle stop, avoid sudden stop starts.

When you approach an incline, it is best practice to lean forward, (fig 18). This moves the centre of gravity of your Scooter towards the front of the Scooter for improved stability. When you approach a decline, it is best practice to lean backwards in your seat, this will transfer the centre of gravity towards the rear of your Scooter to improve traction and stability (see fig 17).

Warning: Do not exceed the incline guidelines or any other specifications presented in this manual.

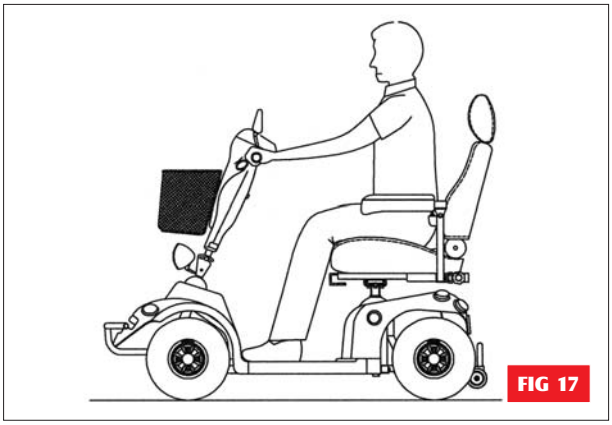

Fig17:Normal driving position

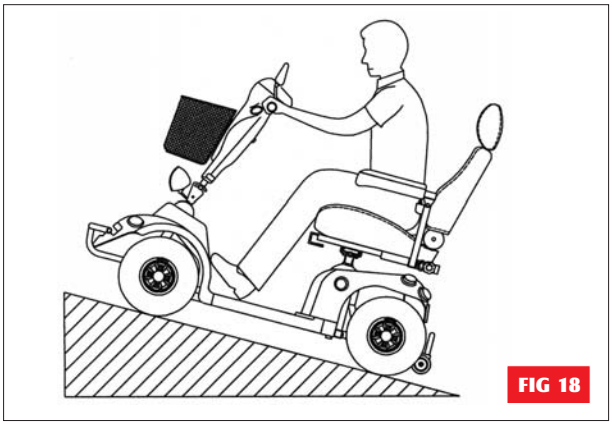

Fig18: Increased stability driving position

CONTROL OVER STATIONARY OBSTACLES

Stationery obstacles (steps, kerbs etc) must be avoided where possible. Your Scooter has a ground clearance of 9cm (3.5"). Proceed with extreme caution when driving near raised surfaces, unprotected ledges and/or drop-offs such as kerbs, stairs, etc.

Caution: Most new pavements have wheelchair access ramps at intersections, We strongly recommend that you use these at every opportunity. If there are none, and you can't find a driveway either, you may be able to go over the kerb, if it is small enough. You can also with your **Freerider** Scooter drive on the road until you find a suitable entry point for the pavement.

Warning: If you require to climb or descend a kerb or similar small obstacle, you should be aware that this will 'jolt' and bump your Scooter and also yourself, it will also increase the risk of tipping your Scooter and making it less stable. Only attempt to negotiate up or down a kerb or similar obstacle if you are fully competent and medically fit and are able to counter balance any sudden movements towards instability, other wise avoid this type of manoeuvre.

The obstacle must be within the capability of your Scooter, the obstacle must be under 9cm (3.5").(**Please note** your Scooter is very powerful and can climb higher obstacles but the ground clearance of the lowest point is your front steering axle, failure to observe this warning may permanently damage your Scooter, and will not be covered by warranty.)

Be careful. When negotiating a kerb or similar obstacle it must be approached square, at a **direct 90˚angle**. Always approach the kerb so that both front and back wheels go over at the same time, and in the same direction

When going up a kerb, turn your 'Hi/Lo' speed switch to 'Lo' speed, and your 'min-max'speed range knob to a suitable setting for motor power to negotiate the size of the obstacle. Start 15cm(6") back from the kerb. Apply the power gently, increase as necessary. Steer straight keeping the power maintained , do not stop half way or you may cause an obstruction. Be prepared to feel a bump as each wheel reaches and climbs the kerb. Again, with an amount of practice, you will find this procedure easy to do.

Warning: On no account should you charge at the kerb, this may damage your Scooter and could make it unstable- **always think before you make a manoeuver.**

Going down a kerb is simple, but must be taken slowly to avoid jarring. Slowly approach the obstacle driving your front wheels over the kerbs. Use as little power as possible. Look out for traffic, observe the rules of the road at all times. Accelerate quickly over the road looking and listening for other road users. It is good practice to switch your 'hazard' lights on when making this kind of manoeuver, you will make your Scooter more visible to other road users.

Warning: Please note the size of the kerb that you can climb or descend will depend on certain factors.

1. Your body weight, together with any objects you may be carrying.
2. The shape of the kerb. Square kerbs set in gullies are very difficult to negotiate.

3. Weather conditions; wet slippery surfaces can be dangerous. Always avoid these situations if possible.

Note: If your Scooter wheels have been fitted with a solid puncture resisting inserts then kerb climbing must be avoided. **Freerider** do not recommend these inserts as they reduce the pneumatic suspension properties of your Scooter.

CONTROL OVER GRASS & GRAVEL ETC.

Care must be taken when attempting to drive over soft surfaces such as those found in parks etc. The surface may look level, but this can be deceiving and hidden dangers may make your Scooter become unstable or grounded. Avoid unkept grass, loose deep gravel or sand, do not exceed the capabilities of your Scooter.

Always have an attendant to assist you in circumstances where you are not certain of the terrain. Always anticipate and think safety.

Caution: Because of the power of your **Freerider** Scooter, you will be able to climb inclines. But The maximum safe gradient limit is 10 degrees. The reason for this is to ensure good stability.

Always have the anti-tipping wheels fitted to your Scooter (Fig 19) .They are an important part of your Scooters design and reduce the likely hood of backward tipping.

Always avoid where possible turning on slopes or climbing kerbs. Always make certain that your Scooter is in full working order and your batteries are fully charged before attempting to drive.

Never attempt to drive beyond the design capability of your **Freerider** Scooter. Observe weather conditions. Tyres can slip on wet or icy surfaces.

DO NOT DRIVE THROUGH DEEP WATER OR LEAVE YOUR FREERIDER EXPOSED TO HEAVY RAIN.

i.e. During or after a thunderstorm.

Do not attempt to turn when negotiating an incline, only turn when all wheels are fully on or off the incline; failure to observe this warning could result in the machine becoming unstable and toppling over.

Always lean forward when ascending an incline and backwards when descending an incline. This will enable you to maintain good stability and will eliminate any chance of a rear or forward upset.

PLEASE NOTE: The rear stability of your Scooter is dependent on a number of factors which you should consider before attempting to climb an incline or other obstacle: (a) your height; (b) the height of your seat; (c) your weight and (d) the angle of the incline you are attempting to climb. All of these factors can affect the rear stability of your **Freerider** Scooter. If you are unsure of your capability to climb an obstacle, then try another route - always think 'safety first'.

TRANSPORTING YOUR SCOOTER

Whether it is for a holiday, a day out to visit family or friends, or a trip to the shop, your scooter can be taken along too. To enable your Scooter to be transported a suitable size estate car or 'people carrier' type vehicle will be necessary. You will require a vehicle with a tail gate height of 74cm(29")and an internal storage space of width 66cm (26") and length 142cm (56"): please note this will reduce your passenger carrying capacity.

You will also require a suitable folding ramp to lift your Scooter into your car. You Freerider Distributor will be able to advise you of suitable products for this purpose (see fig 20).

Please note in some instances of vehicle access you may need to remove your Scooter's seat prior to loading your Scooter (see note No.1,'Seat Lock Lever' on page 7 of this manual).

LOADING YOUR SCOOTER

1. Remove your seat or fold down the backrest as necessary.
2. Lower the steering handlebars sufficiently to allow the handlebars clearance under the top of your tail gate entry, lock handlebars into position with black locking lever.
3. Set you 'Hi/Lo' speed switch into 'Lo' position(see fig 11 No.2, page9)
4. Set your speed 'min-max' adjustment dial (see fig11 No.1) to a suitable power output to climb the ramp angle safely.
5. Switch Scooter 'on' and gently operate the speed control lever, to make a slow and controlled accent of ramp.
6. When you have safety loaded your Scooter into your vehicle switch off the power switch. Load ramp into vehicle.

To unload your scooter from your car follow points to 1 to 6 in reverse order.

Warning:

- Always make certain that you are on level ground when loading and unloading your Scooter from your carrying vehicle. Always keep your body clear of your Scooter to prevent entrapment.
- Always make certain your scooter tyres and your ramp surface is dry, failure of observe this warning could make your Scooter unstable and put you in a dangerous situation.
- Always make certain your ramps are at a sufficiently low angle to maintain good stability and climbing adhesion. Failure to observe this warning could put you in a dangerous situation.
- Never ride on your Scooter when loading it into a vehicle, failure to observe this warning could put you in dangerous situation.
- Always use a ramp with a designed load specification which is capable of carrying your Scooter, failure to observe this warning could put you in dangerous situation.
- Always make certain that your Scooter and any ancillary part is correctly strapped into your carrying vehicle to prevent forward or reward movement during normal driving or in the case of severe braking. Most of modern vehicles have 'loading eyes' situation in the carrying vehicles floor, use these with suitable straps to prevent your Scooter moving.

Warning: Always make certain your scooter drive system is in the engaged position.

DISMANTLING YOUR SCOOTER

For convenience, you may want to dismantle your scooter to allow it to be transported in a smaller space. Your Scooter can be dismantled into six individual parts (see fig 31, page 23). To enable Scoter to be dismantled and transported follow these simple instructions. This procedure can be carried out without tools.

1. Drive your Scooter close to the vehicle into which you are about to load it. You may need some assistance to life the components once your machine is dismantled.
2. Switch off your scooter. First remove the seat by releasing the 'black' locking lever. Rotate the 90° to the right or left , lift the seat upwards slightly twisting.This will

FIG 21

FIG 22

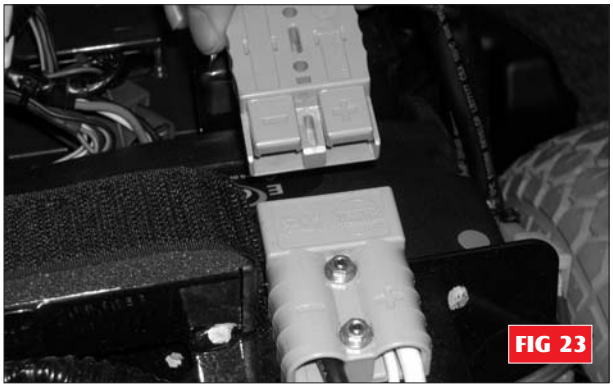
FIG 23

FIG 24

FIG 25

release it from its mounting tube (fig 1,page7).

3. Lift up the rear cover, disconnect the rear light plug and socket (See Fig 21), please safely to one side. Note the cover is secure by velcro® tyre material at each. side at the front and in the centre. Unfasten the battery straps (fig.22) by parting velcro® fastening.
4. **Battery Plugs**: Disconnect the two 'grey' shrouded battery plugs by gently pulling apart. These plugs are polarized and only be fitted together one way. Do not force together when reassembling (fig.23).
5. Carefully lift up each battery with the handle provided. Use two hands for this operation, one on the handle and one to steady the battery (fig.24).
   Note: Make certain that the carry handles is fastened tightly prior to lifting the battery. Please the batteries on a firm and safe surface. Your batteries are sealed and cannot spill if tipped over. Always carry the batteries upright.
   Warning: Do not place metal objects over open battery terminals. BEWARE of short circuits. Make certain the terminals are covered by the red and black plastic protectors at all times.
6. Lift the front wire basket from the mounting bracket on the handlebar cover, you will note this mounts on three clips (Fig 25).
7. Lower the handlebars by releasing the locking lever.(fig 10 page 9). The handlebar will rest on the floor mat. Note place a soft piece of material under the painted console for protection.
8. **Electric Plugs**: disconnect the 12 pin and 3 pin 'white' connectors (fig 26/27) by squeezing the small latch and carefully pulling apart. These connectors are polarized and can only be reconnected together one way. Note the locating lugs on the connectors, do not force these connectors together when refitting.
9. **De-Docking Lock Pin** : The de-docking lock pin locates the rear motive powered unit to the front steering platform (see fig.28). The locking pin locates through holes in the front square chassis tube bracket and the rear chassis location tube. The locking pin is held for convenience at one end by a ring and chain. At the lower end of the locking pin is a spring loaded clip (see fig.29). When secured through the two chassis parts, the de-docking locking pin (fig 28) is prevented from removal by the spring loaded clip (fig. 29) .
   Warning: It is good practice to visually check this locking pin weekly for correct location through the two chassis points. Visual access to the locking pin can be viewed under the rear body cover.
10. You are now ready to separate the two halves of your Scooter.
    Warning: Before you carry out this operation, have you remembered to unfasten all of the connectors and plugs? Failure to observe this could result in unnecessary damage. Carefully separate the two halves of your Scooter (fig.30) by holding the 'C' shape handle on rear of the Scooter so that the rear chassis remains level. With your

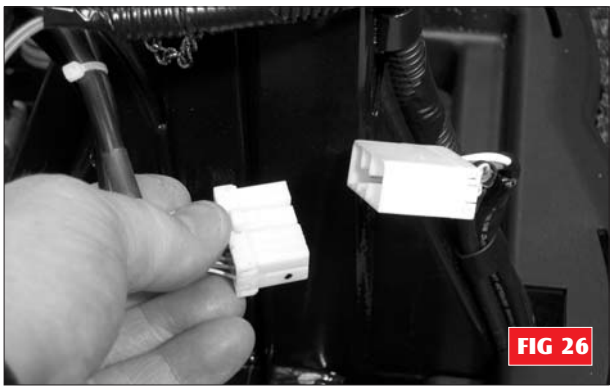
FIG 26

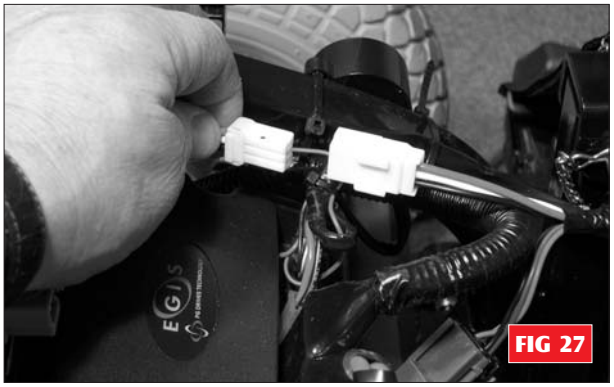
FIG 27

FIG 28

FIG 29

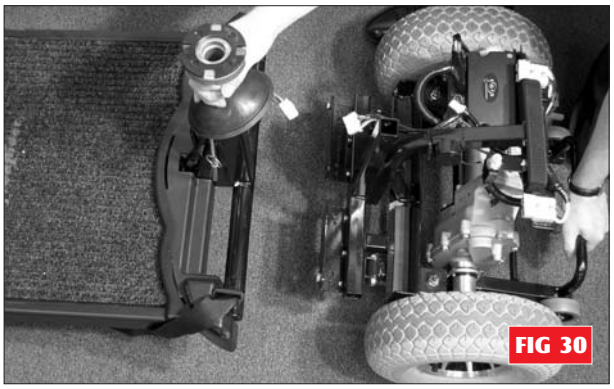
FIG 30

Other hand, lift the seat post vertical until the front and rear sections have separated.
NOTE: This operation is made easier if you first lower and lock the tiller. You will find the front section is better balanced in this position.

Caution: Please keep the rear chassis level at all times during the de-docking operation, failure to observe this caution will result in the two sections jamming together.
The Scooter is now dismantled into its 6 basic parts (Fig 29).

1. The Seat
2. The Batteries
3. The Basket
4. Rear Motive Powered Unit
5. Steering Platform
6. Rear Cover

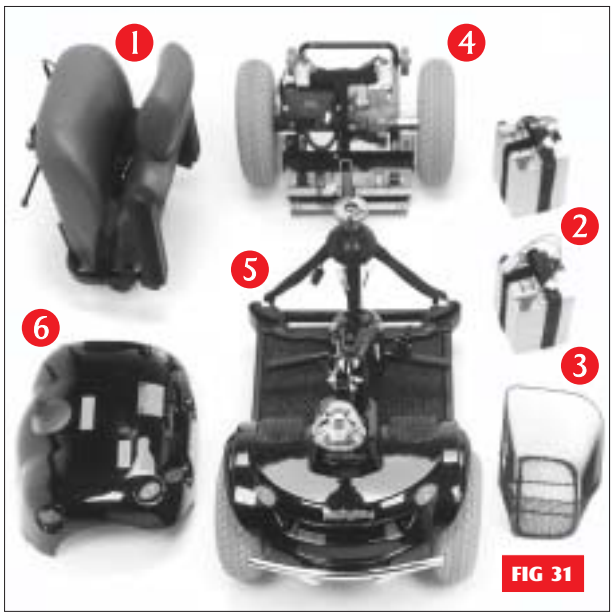

FIG 31

You can now load your Scooter into a suitable car.

Caution: Protect clothing when lifting Scooter parts, some components may have lubricating fluids on their surfaces.

Work out the best practice to stow each part of your machine, this will vary with different car designs. An old blanket can be used to stop the various parts rubbing against each other.
It is good practice to stand the batteries upright and locate them so they do not fall over and touch the battery posts on any metal framework. Your Scooter will increase the load in Your car, please remember this and adjust your driving to suit this condition.

Note: In some midsize cars the scooter seat may need to be stowed on the front seat of the vehicle. Use the cars safety belt to secure the seat in position.

Caution: The body mouldings on your Scooter have not been designed for lifting your machine. Use the firm metal lifting handles only.

Warning: Take care when lifting heavy parts. If in doubt always seek assistance when lifting parts in or out of your vehicle.

HOW TO RE-ASSEMBLE YOUR SCOOTER

Your Scooter is very easy to re-assemble once you reach your destination. To re-assemble, follow the preceding procedure in reverse order, noting the following:

1. When re-assembling the front and rear sections of your Scooter, make certain you are on firm, level ground. Place the front and rear units close together with the round tube of the front steering section facing with the 'U" Shaped channel of the rear motive unit.(see fig 30 on page 22)
   With one hand support the rear motive unit at the 'C' shaped handle keeping it level. With your other hand lift the rear of the front steering section by the seat post and lower it into the 'U' shaped channel, simultaneously locate the locking pins brackets together.
   Fit the safety locking pin (fig28, page 22) through the location holes, make certain that the spring loaded safety 'clip' is firmly located into the safety "locking pin" (see fig 29 page22)

Warning: Failure to engage these safety pins correctly could result in an accident, please take particular care.

2. Connect the electrical plugs correctly together.
   DO NOT FORCE TOGETHER you ay have them the wrong way round, observe the locating groove in each connector.(see fig 23, fig 26/27, page 21/22)
3. When you have replaced the batteries make certain that they are correctly strapped down (see fig22,page21)
   The battery straps simply locks together via the velcro® adhesive technique.
4. When you have re-assembled your Scooter and fitted the rear cover and seat, switch the power key to the 'on' position. The battery level gauge on your console (fig11, page 9) will illuminate. This will indicate that you have re-connected the battery connectors correctly. If the battery level gauge does not function, then you have not connected the wiring connectors correctly (fig 23, fig26/27,page 21/22).

Test the drive function of your machine. Does your Scooter move forwards and backwards correctly ? If your Scooter does not drive, the freewheel lever may be in the 'disengaged' position (9 bars flashing), see section 'Freewheeling your Scooter in this manual.

Important notice: Your Scooter has been designed for pavement and road use only, **IT IS NOT A DIRECT REPLACEMENT FOR A SEAT IN A MOVING VEHICLE.**

Now enjoy your Freerider.

BATTERIES & BATTERY CHARGING

BATTERY INSTALLATION

Your **Freerider** Scooter is equipped with two maintenance free 12 volt batteries. The batteries are linked together by wiring cables to supply the electronic system with 24 volts of power

Warning: It is imperative that the two batteries are connected correctly to prevent a short circuit between the two batteries.

When first installing the batteries follow these assembly instructions.

1. Connect the red wire of the battery cable to the positive (+) terminal of the battery, with the provided.
2. Connect the black wire of the battery cable to the negative (-) terminal of the battery, with the provided.
3. Repeat this procedure on the second battery making certain the plastic red/black terminal covers are secured over each terminal.
4. Position each battery onto the Scooter frame (see fig 32). With the battery terminals to the outside and away from the metal chassis.

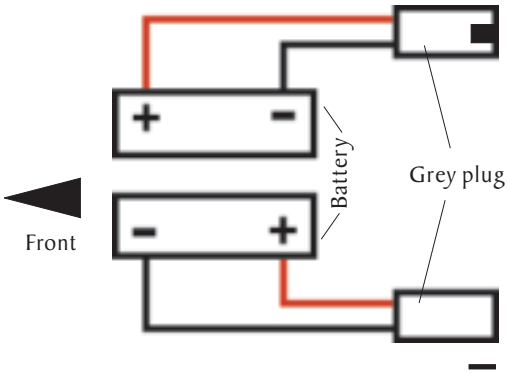

FIG 32

Caution: Batteries are heavy you may require assistance.

5. Your batteries are located under the rear cover positioned below your seat. The two batteries are secured to the Scooter frame by velcro® hold down straps. Each strap frame passes from the chassis anchor point, around the battery and through a metal loop positioned on the seat mounting post. The strap is fastened tightly over the battery and simply locks together via a velcro® adhesive technique (see fig 22 page21).
6. Connect the two grey plugs of the batteries into the two grey sockets of the wiring circuit (fig 33).
7. Switch on your Scooter, the battery meter will now illuminate to show the state of charge in the batteries and your Scooter is ready to drive.
8. Switch off your Scooter, fit the battery cover and seat.

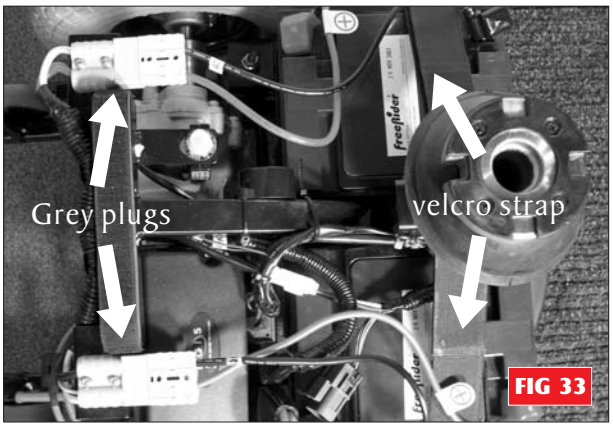

FIG 33

BATTERY CONNECTIONS

Warning: Batteries are heavy, always handle with two hands. You may require assistance. Do not allow metal tools to touch both battery terminals together, this will cause an electrical short and may damage the battery and injure you. Always cover the battery terminals with the red/black plastic covers.

BATTERY CHARGING

Your Scooter has a lot of power for a small Scooter. Keeping it working to its maximum potential means that its two batteries must be maintained with full power. Nightly recharging, after use, will help you to give them a longer life and will ensure your Scooter is always ready to go when you are.

BATTERIES

Your Scooter is fitted with two sealed maintenance-free Batteries, especially designed for motive traction use. This means that you do not have to worry about topping up the cells.
Warning: Do not attempt to remove the safety valves situated in the top of the battery. Failure to observe this warning will invalidate your battery guarantee.

Your Scooter batteries are virtually Maintenance-free because the electrolyte is immobilized in a special form and therefore will not leak out, even if the battery is accidentally overturned.
Because your **Freerider** batteries are sealed they are more likely to be accepted for carriage on aircraft. Please consult your carrier prior to departure, as they will need advance warning that you wish them to carry batteries.
Please note: Each carrier reserves the right not to carry what may be termed 'HAZARDOUS CARGO'. **Freerider** cannot be held responsible for their final decision.

BATTERY CHARGER

The battery charger supplied, is special to your Scooter and it may not be suitable for any other powered mobility product. Only use the charger supplied with your Scooter; other makes of charger may permanently damage your batteries and would invalidate the Guarantee.

CHARGING THE BATTERIES

Pleasese refer to the battery charger instruction attached along with the battery charger.

YOUR GUIDE TO SAFE AND LASTING BATTERIES

1. For longest life, your batteries should always be re-charged after use. Preferably over night.
2. If your Scooter is not used for a period of time, a refreshing charge should be given every month. Never leave your batteries in a discharged condition. This is particularly important with sealed batteries as fitted to your Scooter. If your batteries fall below a total terminal voltage of 12 volts, the charger supplied with your Scooter will not operate. Please consult your **Freerider** dealer.
3. If your Scooter has been stored away for some time, re-charge your batteries before re-using it.
4. Every month, check the connections on the batteries, making sure they ate tight and clean.
5. Batteries carry a limited guarantee from the original manufacturer which is subject to a stringent wear and tear clause. Any battery faults due to a defect in the original manufacture will normally become obvious within the first two months. Any gradual deterioration in performance after this period is normally associated with fair wear and tear, mis-use or accidental damage and, as such, is not covered by the manufacturer's warranty. (This does not affect your statutory rights).

Note: If one battery becomes faulty during the guarantee period only that battery from the pair will be replaced.

FREQUENTLY ASKED QUESTIONS

Why do my batteries require recharging?

Batteries are the fuel tank for your Scooter. They provide the vital energy to power your vehicle. When you ride your Scooter, the drive motor consumes the energy stored in the batteries. The battery's energy is gradually reduced over the period of driving time and will need to be replaced before you can use your Scooter again.
Similar to the situation with a motor car, in that you need to replenish the fuel as it is used up as energy, likewise with your Scooter, you need to replace the used battery energy by re-charging the discharged battery cells.

How does my Charger work?

Your battery Charger is an intelligent automatic charging instrument. Your Charger's robust framework contains a number of quality components; namely a transformer, rectifier and complex control circuitry.
The Charger receives the 230volts domestic electricity supply via a standard 3-pin wall plug and reduces this voltage down to 24 volts via a transformer. At the same time it rectifies the A.C., alternating domestic current into D.C., direct current. This matches exactly, the voltage characteristics stored by your Scooter's batteries.
Your Charger automatically controls the re-charge cycle from the moment that you switch it on to the moment the green 'Charge Complete' light on the face of your Charger illuminates.
When your battery's voltage is very low, the Charger will work extremely hard to replenish the spent energy. This is called the 'Bulk Charging' stage. As the battery voltage approaches 90% of the full charge capacity, the Charger reduces is output for the final stage of the re-charge cycle. The time taken from switch-on to the end of the bulk charging will vary, depending on the amount that the batteries have been used, or in time their age. At this point a timer is automatically started, to regulate the final stage of the charging cycle, this set time ensures maximum capacity and battery life.
The length of time to re-charge your batteries will vary from 8 up to 13 hours. This variation in time is due to the following factors:

1. **Depth of discharge**-The amount of energy you have removed from your batteries when driving your Scooter.
2. **Battery age**-This is due to the changes in their internal electrical resistance.

Where can I re-charge my batteries?

In most safe domestic environments, i.e. your house, garage or shed. **Do not expose to rain or spray - for indoor use only**
Later on in this information, there is reference to the way temperature variations can affect the performance of your vehicle. When charging your batteries **where reasonably practicable**, ensure that the battery Charger is close to the vehicle being charged so that the temperature of the battery Charger and batteries are almost compatible.
For example, a vehicle may be outside whilst the battery Charger is inside. It is possible in this situation that the battery Charger will sense the inside temperature, whereas the batteries on the vehicle will be at the outside temperature, resulting in an undercharged situation. **This situation must be avoided.**

How often must I re-charge my batteries?

Many factors come into play when deciding how often to charge your batteries. You may use our vehicle all day on a daily basis or you may not use it for weeks at a time. Other factors such as driver and baggage weight, smooth or rough terrain, flat areas or inclines and speed must all be considered.
With these variables you should concern yourself with two questions: **HOW OFTEN** should I charge and for **HOW LONG**? The Charger is designed so that it is impossible to overcharge your batteries. If you follow the guidelines below, your batteries will provide safe and reliable operation.

1. **If you use your vehicle during the day.** put it on charge as soon as you have finished using it. The Charger is fully automatic so it will not overcharge your batteries. Your vehicle will be ready each morning to give you a full days service. It is recommended that you charge your batteries after daily use until the green 'Charge Complete' light illuminates.

2. **If you use your vehicle infrequently** (once a week or less) you should charge it at least once per week until the green 'Charge Complete' light illuminates. Remember: Keep your batteries fully charged and avoid deeply discharging them.
3. **Storing batteries:** Batteries should always be stored fully charged. Check once a month and recharge fully if needed. Sealed batteries can hold their charge for approx. 6 months. Always disconnect battery leads. If they are left connected on the Scooter, remember key switches, meters, lights and electronic circuits can drain the batteries rapidly. It is advisable to disconnect the batteries for prolonged storage. Store in a warm, dry room. Do not allow to freeze, if frozen, fully thaw in a warm room prior to recharging or you may damage your batteries.

How can I ensure maximum battery life?

Simply put, a fully charged battery is a happy battery! A fully charged battery will provide reliable performance and extended battery life, so keep your batteries fully charged whenever possible. Remember batteries are expensive to replace, good maintenance will save you an unnecessary expense!

Handling your batteries

Extra care must be taken when handling batteries, if you decide to dismantle your vehicle for transportation etc. Dropped batteries, even from a very small height, can lead to damage of the internal components, causing premature cell failure. Your batteries are sealed and do not require maintenance. Do not force open the valves in the battery top.

Warning: Batteries are heavy, you may need assistance when lifting.

Disposal

Caution: Used batteries must not be disposed of by means of a domestic refuse disposal unit (dustbin) etc. Please contact your Dealer to dispose of used batteries. Please note, he may charge for this service.

BATTERY WARRANTIES

The batteries fitted to your vehicle are guaranteed against a manufacturing or material defect for 12 months. Any battery faults due to a defect in manufacture or materials will be obvious within a few weeks of use. Your batteries are not guaranteed to perform to full capacity for 12 months. This will, of course be dependent on the actual use of the vehicle and how often the batteries are cycled i.e. discharged and charged.

Gradual deterioration in performance and reduction in range is normal and associated with fair wear-and-tear, misuse or accidental damage. Under these circumstances, the warranty will not apply. It is a fact that some users due to their hectic lifestyle, weight or operating conditions, may wear their batteries out during the original battery manufacturer's guarantee period due to extensive use of their Scooter. This is termed 'Cycle Life'. Batteries have a defined number of discharge cycles they can make i.e. the more times you use your Scooter the more cycles your battery will make-the shorter their life span.

If you take time to run-in your batteries properly, it will be worth it. Remember: how long your batteries will provide service is quite often a reflection of the care they receive. This is how to run-in your new batteries:

1. Fully recharge any new batteries prior to your initial use. This will bring your battery up to about 88% performance.
2. Ride your vehicle around the local area. Do not venture too far away until you become accustomed to the controls and feel of the vehicle. This will gently run-in your batteries.
3. Give your batteries another full charge and run the vehicle again. The batteries will now perform to over 90% of their full potential.
4. After 10 to 12 charging cycles, the batteries will top off at 100% charge and last for an extended period due to your patience and care in the first few days of operation.

How can I get the maximum operating time per charge?

Rarely do we have an ideal driving situation such as a smooth, flat, hard terrain with no wind or curves and warm temperatures. More often, we are presented with hills, uneven and loosely packed surfaces, curves, wind, cold and heavy loads. All of these factors will affect the distance or running time per battery charge.

Here are a few suggestions for obtaining the maximum range per charge:

1. Always charge your batteries fully prior to your trip. It is a good idea to keep your Charger connected when the 'Charge Complete' (green) light is illuminated in the 'Top-Up' mode.
2. Maintain relevant tyre-pressures as stated in the Technical Specifications of this Users Instruction Manual.
3. Plan your trip in advance to avoid inclines, kerbs and soft surfaces.
4. Limit your baggage weight to essential items.
5. Try to maintain an even speed to avoid stop and start driving.
6. Ensure recommended routine servicing of the vehicle's components, i.e. motors, brakes, electrical connections etc., is carried out as instructed in this Users Instruction Manual.

Warning: When working or disposing of your batteries

1. Always make certain the terminals of your batteries are covered with the red/black terminal protectors. Do not allow metal objects to short out the terminals, your battery could explode causing you injury.
2. Do not allow your batteries to freeze. If frozen allow them to naturally thaw out before charging, failure to observe this warning may damage the batteries.
3. If you need to replace your batteries, contact your **Freerider** Agent. Only batteries supplied as original equipment on your machine will give you the best performance. When charging batteries make certain the positive and negative terminals are correctly assembled. Failure to observe this warning may cause an explosion, short circuit or fire.

4. Always handle batteries carefully, they are heavy, it may require two people for lifting. Wear protective gloves and glasses when handling.
5. Dispose of worn out batteries carefully, contact your local waste disposal authority.

CARE & MAINTENANCE

Your Scooter like any other electro-mechanical machine will benefit from regular servicing by your **Freerider** dealer.
You too, can help keep your **Freerider** in tip-top condition by following a simple guide to home maintenance.

Note: Only competent people should carry out service work.

SEAT UPHOLSTERY

A damp cloth and a little soapy water will keep your seat, backrest and arms looking smart. Do not use abrasive cleaners as this will damage the coating. Upholstery can be damaged by chemical cleaners. The coating material can also degrade over a period of time due to contamination by natural oils in the hair and skin or from medicated power products..
Ultra-violet light can also reduce the life of the upholstery coating material. This is a normal ageing process and cannot be guaranteed (see exclusions in the Guarantee Terms).

BODYWORK

The painted bodywork on your **Freerider** Scooter can be lightly washed with clean soapy water. Do not use abrasive cleaners or strong detergents. This could fade the colour, an auto tyre shampoo works well. Remove salt contact as this is very corrosive to bright metal parts.

Caution: Do not hose down your Scooter with a powerful cleaner. Water could be forced into the electronics and cause permanent damage.

On the painted finish, be cautious not to wash with a dirty cloth as this could scratch the paint finish. Auto polish can be used to keep the paintwork and bright chrome parts in pristine condition.

The metal framework of your Scooter should be cleaned once a year and any paintwork damaged should be treated to prevent further attack from the elements. Wash regularly if contact is made with road or sea salt, this is very corrosive.

Do not store your Scooter in damp conditions. This may affect the electronics if left for very long periods of time. Moisture, if left unattended can cause deterioration on metal work, protect with proprietary cleaners.

ELECTRONICS

Servicing of the drive electronics and charger should only be carried out by your local **Freerider** service dealer. These units are sealed and should not be opened. BROKEN SEALS WILL INVALIDATE YOUR GUARANTEE.

Do not operate your **Freerider** Scooter in exceptional weather conditions i.e. very heavy rain or wind. Cover your machine up, if it is to be left unattended and outside for a long period of time. Do not drive through deep water with your Scooter. This could damage the electronic speed controller. Sea and road salts are very corrosive and should be neutralized quickly.

MOTOR

The motor on your **Freerider** Scooter is fitted with long-life brushes. The brushes should be inspected for wear every 12 months or more frequently if you use you Scooter daily for long periods. The brushes should be changed when they have worn down to approximately 8mm in length.

DRIVE TRANSMISSION LUBRICATION

This unit is factory filled and will not normally need additional lubrication.

Note: Your **Freerider** Scooter transmission is filled with a special lubricant. **Do not** attempt to force grease into

the transmission as this will contaminate the original lubrication and will invalidate your guarantee.

Caution: **Take care when lifting the transmission, keep well away from clothing. It is normal to find a light film of lubrication around this part.**

MOTOR BRAKES

Safety Note: For your own safety, we recommend that you check the function of your Scooter brakes prior to a journey.

Motor Brake: If the motor brake is functioning correctly and the drive is engaged you will not be able to push your machine when it is switched off. Or switched on with the speed control lever in the 'zero speed', central position.

Warning: **If your machine can be pushed as described above, the motor brake could be faulty. Please do not use, contact your local Freerider distributor.**

Note: Check the Freewheeling Instructions on page 12 of this manual.

DRIVING BRAKE

Warning: When you drive your **Freerider** Scooter and you let go of the speed control lever your Scooter should reduce speed very quickly. If you notice a change in the normal slowing/braking condition, and your Scooter and it does not slow down quickly, **please do not use your machine, contact your Freerider distributor.**

MANUAL EMERGENCY BRAKE

The manually operated 'Emergency Brake' is designed to be operated only in the case of mechanical or electronic failure to the motor and driving brakes, previously mentioned, See pages 11& 12 figs 13 & 14 for operating instructions.

Caution: On no account operate this brake in conjunction with the electronic motor brakes. Failure to observe this instruction may cause damage or premature wear to the motor and transmission system.

The manual brake system can be adjusted for wear to the braking material by adjusting the operating cable length adjustment nut (see fig 34).

Warning: Brake adjustment should only be carried out by a competent engineer, failure to observe this warning could put the brakes in an unbalanced state and may cause damage to you or your Scooter.

TYRES

Check the condition of your tyres regularly. Look for signs of wear, cuts and foreign objects lodged in the tread. Maintain the tyre pressures at all times; failure to comply with this can lead to poor performance of your machine and could make your machine unsafe and/or unstable. Tyres should be replaced when the tread is worn to 0.5mm.

Warning: Your **Freerider** is designed with 'split' wheel rims.

FIG 34

FIG 35

Do not remove wheel bolts with the wheel inflated. Maintain pneumatic tyres at the recommended tyre pressure found in this manual under 'Technical Specifications' Failure to observe this warning may result in personal injury.

TYRE SERVICING REAR WHEEL

To remove a rear wheel from your **Freerider** Scooter for the service of a tyre or tube carry out the following instructions **(only competent people should carry out this procedure).**

1. Using a suitable body stand, lift the side of the vehicle you wish to service off the ground. Place the stand under the metal chassis. Care must be taken when lifting heavy loads, you may need a friend to help you.
   Warning: Care should also be taken when working on a stand. **Please be safe. Do not lift by the plastic bodywork.**
2. Deflate the air from the wheel assembly by removing the valve core from the valve with a suitable valve key (purchased from auto shops).

   Warning: Please note the rims of your wheel are a split two part rim system, do not dismantle the wheel from the hub without first letting the air out of the tyre. Failure to observe this warning could put you in a dangerous situation.
3. With the aid of two 13mm spanners (not supplied) remove the 8mm wheel nuts and bolts from the wheel rims and centre hub (see fig 35).
4. Side the wheel rims complete with the tyre from the hub. Pull the two rims apart to expose the tyre and tube.
5. Replace tyre and tube as necessary. Reassemble components in reverse order.

Note: The rear wheel hubs are located to the drive axle by a steel key. If the hubs need removing for service, you will first need to remove the hub centre nut with a 19mm spanner. Please note the hub fits firmly onto the drive axle, removal of the hub will be aided with the use of a suitable 'puller' tool.

Warning: Please note the rims of your wheel are a split rim system, do not dismantle the wheel from the hub without first letting air out of the tyre.

TYRE SERVICING

To remove the front wheel for service follow these instructions:

1. Place your Scooter on a suitable work stand as in note No.1 above.
2. Deflate tyre as necessary.
3. With the aid of a 19mm spanner remove the centre nut from the wheel axle (see fig36) slide the wheel from the axle noting any spacers and bearings.
4. With the aid of two 13mm spanners (not supplied) remove the 8mm nuts and bolts from the wheel rim and centre hub.(Have you deflated the tyre?)
5. Part the inner and outer wheel rims from the axle hub and tyre side wall.

To reassemble the wheel following the installation of the replacement tyre or tube follow the above procedure in reverse order noting the following points:

1. Make certain you have securely tightened the two split wheel rims to the centre hub with the original nuts and bolts.
2. Make certain your tyre is correctly inflated to the recommended pressure.
3. Make certain the hub bearings and any spacer washers or bushes are correctly located.
4. Tighten the special ' nyloc ' locking centre nut. Not: If the plastic locking ring on the nut is damaged the nut should be replaced.

TYRE PRESSURES

The Scooter wheels are pneumatic and their pressure needs to be maintained at Front 30psi (2.1 bar) Rear 35psi(2.5 bar).

Warning: Pressures exceeding those recommended will result in an uncomfortable ride. Underinflation will result in poor battery and motor performance. Do not inflate to the maximum pressures marked on the side wall of the tyre, this could damage the tyre or wheel rim. These pressures are the tyre manufacturer's maximum pressures and are not suitable for your Scooter

FIG 36

BATTERIES

Keep your batteries well charged (see Battery Charging section of this manual). Keep batteries clean and in a dry frost-proof place. Keep battery terminals tight. Your Freerider Agent will be able to test your batteries for their state of service.
Note: a charge may be made for this service.

IMPORTANT: It is not possible to predict the life expectancy of your batteries. This is mainly due to the different workloads a battery can be subjected to.(see page 27 of this manual)

Some **Freerider** Scooter users will use their vehicle every day and for long periods of time. Their batteries will receive a near total discharge, and the life of the batteries will be short (12 months or less some cases).

Other Scooter users will use their machines less frequently, putting their batteries through a less demanding discharge lifestyle. These batteries will probably have a longer life in excess of 12months. This can only be a general guide and one cannot be more specific, due to other factors such as; motor loads, tyre pressures, general service factors, working conditions, periods of non-use and abuse etc.

When you need to purchase batteries, always insist on the model fitted as standard equipment to your Scooter. Do not use less expensive car starter batteries. If in doubt, consult your local **Freerider** authorised agent.
Warning: Correct disposal of exhausted batteries is advised.

Please note: The charger supplied with your **Freerider** Scooter is specifically designed for sealed type batteries and may not work correctly with other battery designs. (See also Batteries and Battery Charging section of this manual).

LUBRICATION

The Freerider Scooter has been designed with low maintenance in mind. Wheel bearings and steering bearings are sealed for life. The following points will need checking/lubricating at the following service intervals:

RECOMMENDED SERVICE INTERVALS DAILY

DAILY Check the following:

- Operation of motor brakes (see page14 & 30)
- Operation of driving brake (see page14 & 30)
- Operation of manual emergency brake (see page 11,12 & 14)
- Operation of seat lock (see page 7)
- Tyre condition (see page 30)
- Batteries are fully charged (see pages 24-25)

Caution: Only drive your **Freerider** Scooter if it is in full working order.

WEEKLY Check the following and adjust as necessary:

- Arm rest tightening knobs (see page 7)
- Tyre pressures (see technical specification page 36)
- Battery fastening strap (see page21)
- Allow battery charger to go through a full recharge cycle until the green light is illuminated (see page 24-28)
- Clean paintwork with auto shampoo. **Do not use a high pressure hose**. Wax painted and bright metal parts.

SIX MONTHS Check and adjust as necessary:

- Tyre wear, replace as necessary (minimum tread 0.5mm)
- All fasteners and fittings for sound function
- Tension of handle bar lock and hinge bolt
- Battery connections
- Inspect all electrical plugs and sockets for damage and good contact and fit.

Lubricate the following:

- Wig-wag accelerator lever pivot point (see Fig 37)
- Spray metal parts with moisture repellent (Wd40)
- Seat lock lever pivot bolt
- Seat arm hinges
- Inspect, lubricate and adjust upper handle bar steering bearings

ANNUALLY Check the following and adjust as necessary:

- Motor carbon brush wear (minimum brush length 8mm)
- Front wheel bearings for wear
- Chassis for sound welds
- Rear Drive wheel hub keys
- All wheel bolts
- Drive axle securing bolts
- Motor mounting bolts
- Magnetic motor brake disc and function
- Manual brake shoe lining wear
- Main control box electrical connections
- Main wiring loom for damage
- All steering components
- Clean chassis and repaint any exposed parts
- Lubricate on/off power key barrel with light oil
- Replace any damaged axle seals
- Cycle test charger for full operation function
- Cycle test batteries for operating capacity (This test can be performed by your Freerider Agent)

Note: the items listed under weekly and six months inspection should be incorporated into this annual inspection.

LUBRICATION

Use a general purpose light lubricating oil on moving parts. All wheel bearings are factory sealed and should not normally need lubricating.

Your drive axle is factory filled with a special lubricant and will not normally need replacing.

FIG 37

FIG 38

Caution: Do not mix other lubricants with this factory fitted drive axle lubricant. Failure to observe this caution will invalidate your guarantee.

Please note: These service intervals are a guide, more frequent use of your Scooter may require adjustment to these suggested intervals.

RECOMMENDED AREAS FOR ADJUSTMENT

STEERING COLUMN ADJUSTMENT

The steering column locking system works on a 'cam' principle to lock the column in the desired driving position (see fig 38).

If you notice the column is not firmly held when the black cam operating lever is fully down, follow this procedure to readjust the 'cam' tension:

1. Push steering column forward as far as it will go with the locking lever released, i.e. pushed upwards. Support steering column.
2. With a 10mm spanner (not supplied) loosen the locking nut positioned on the opposite side to the black locking lever .
3. Next to the locking nut is a chrome threaded 'clamping nut' this has a slightly tapered shape. Turn this clamping nut clockwise approximately a quarter of a turn.
4. Push the 'black' clamping lever down and test that the tiller is tightly held in place; adjust 'clamp nut' until correct tension is achieved on clamp plates.
5. Tighten locknut with 10mm spanner.

Do not drive your Scooter with the steering handlebars unlocked or poorly adjusted.

HANDLE BAR BEARINGS

The bearings which control the movement of the steering handle bar may need to be adjusted if up and down movement is noticed in your steering handle bars.

The bearings are accessed by lifting the back rubber cover at the base of your handle bars and the front body cover.

The bearings are adjusted by first releasing the locking nut anti-clockwise one full turn with a suitable spanner (fig 39). Turn the upper bearing adjustment nut clockwise, one flat at a time until all of the up and down movement in the handle bars is removed. Retighten the lock nut clockwise into position with a second spanner. Do not overtighten the bearing adjustment nut, as this will damage the bearing tracks.

The handle bar bearings are **NOT 'Sealed for life' and may require lubrication with a general purpose bearing grease on an annual basis.**

FIG 39

BASIC FAULT FINDING

If your Freerider Scooter will not start:

1. Check the power key switch is turned fully 'on'. If it is, the battery condition indicator meter displayed on your console, will be operating. If the first red status light is flashing once per second, charge your batteries.

If the battery condition meter fail to operate when the key switch is in the 'on' position, check the following:

1. Make sure the battery charger is not plugged into the tiller charge socket, this will prevent drive.
2. Check both battery connectors (grey connectors). Check battery terminal condition (fig 23, page 21).
3. Check the 'circuit breaker': If your Scooter stops for no apparent reason, it is probably due to the circuit breaker disconnecting from the speed control electronic box (see fig 40). On rare occasions, a temporary overload on the electric circuit can occur - for instance when climbing a steep incline. If this happens, the circuit breaker situated under the rear body cover will trip and all power to your drive system will be automatically switched off. Wait for approximately 60 seconds, switch the circuit breaker to 'on 'by entering a finger through the access hole in the top of the rear body cover (located under your seat) and press the switch down. The battery gauge will light up and you are now ready to drive again.

If the circuit breaker trips up again wait for 5 minutes and try again.

Caution: If you find the circuit breaker is continually tripping out, contact your authorised **Freerider** dealer.

The battery condition indicator meter , your Freerider does not drive:

1. Check the 'white' plug's, located under the rear cover and positioned in the main controller module (see Fig 41).Also check status fault codes (page 32)

FIG 40

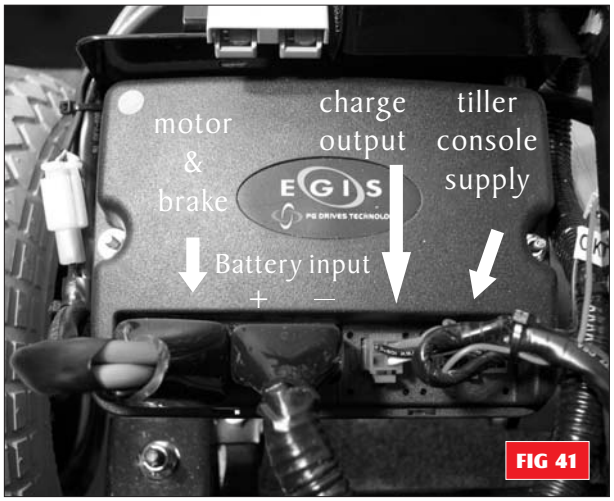

FIG 41

Controller
P&G EGIS 110
FIG 42

2. Check the freewheel lever is fully engaged (see page 12). If it is engaged you should not be able to push your machine. If disengaged, 9 bars will flash on your battery condition mater with the speed lever pressed.

If your Freerider does not slow down or behaves erratically:

1. Turn off the power 'on' key switch.
2. Inform your authorised **Freerider** dealer.

Warning: If you find for any reason your Scooter does not reduce speed when you let go of the forward-reverse speed lever . Switch your Scooter 'off' with the on/off key. The parking brake will activate immediately and stop your Scooter. Beware the scooter will stop very suddenly, brace yourself with the handlebars, sit back in your seat.

Warning: This operation should only be carried out in an emergency; continual use of this facility will damage the drive transmission and motor brake.

Inform your authorised Freerider dealer before using your machine again.

Warning: If you feel for any reason that your Scooter is not driving correctly or making an unusual noise, stop using the machine. Be safe, contact your **Freerider** dealer, he will be able to advise you.

IMPORTANT SPEED CONTROLLER INFORMATION

The speed controller system incorporates a sophisticated micro-processor design (Fig 42). It is located under the rear Body cover of your Scooter (see fig 41). The in-built micro-controller continually monitors the **Freerider** Scooter's systems to ensure safe and reliable operation.

SAFETY CONDITIONS MONITORED INCLUDE

- Speed control system integrity
- Internal voltages and circuits
- Motor voltages and circuits
- Freewheel speed limiting downhill.
- Battery voltage

When the battery voltage is low, the 'battery gauge status' indicator bar light, situated on the control console (fig 11, page 9) will flash one red bar slowly as a warning to recharge your batteries. If the 'speed controller' detects a fault the battery gauge/status indicator will display a number of bar flashes indicating the nature of the fault.

For example, the controller will not operate if the speed lever is not in the neutral position (fig 12, page 11) when the Scooter is switched 'on'. Return the speed lever to the neutral position, when the Scooter will be allowed to operate normally once again. This safety detection is indicated by a steady rippling display on the battery gauge (see also Fault Diagnosis below).

If your Scooter is turned 'on' but not operated for a set period of time (15 minutes approx)the speed controller system will automatically turn itself 'off' to conserve valuable battery energy, you will note the battery gauge is switched off. It can be turned on again by turning the on/off switch to 'off' and then to 'on' again.

A reversing buzzer is provided for when you are driving in a reverse direction. This is an important safety feature to make other people aware of your change of direction.

STATUS FAULT CODES -The number of bar segments flashing on the battery gauge display indicates the type of fault

FLASH CODE (No. Of flashes)	FAULT DISPLAYED BY PROGRAMMER	FREERIDER SCOOTER CONDITION	COMMENT
1 Flash	Battery needs recharging	Driving inhibited	The battery voltage has dropped below 16volits in neutral. Recharge the batteries. Check the battery condition and the connections.
2 Flashes	Motor disconnected	Drive inhibited	Motor plug disconnected. Check motor, motor connectors and wiring.
3 Flashes	Motor wiring fault	Drive inhibited	Motor short or wiring fault. Check motor plug check motor brushes change motor. If above checks fail to correct fault, change controller.
4 Flashes	Not used	———	———
5 Flashes	Not used	———	———
6 Flashes	Inhibit active	Drive inhibited	Battery charger connected.
7 Flashes	Speed pot error (speed control lever)	Drive inhibited	Check speed pot wiring for open or short circuits. Speed pot may not be correctly set up . Contact your Service Agent.
8 Flashes	Possible controller fault	Drive inhibited	Fault detected in main controller-contact Service Agent..
9 Flashes	Motor solenoid brake fault	Drive inhibited	Fault detected in solenoid brake or connection to it or freewheel lever activated.
10 Flashes	High battery voltage	Drive inhibited	Battery voltage at the controller is greater than 38 volts. Check condition of batteries and connections. Supect a charger malfunction.

SPEED CONTROLLER OVERLOAD PROTECTION

The **Freerider** Scooter's speed controller incorporates a current limit thermal protection circuit which is activated when the working temperature of the control unit exceeds a predetermined safe limit.

The thermal protection is normally activated if the Scooter has been working very hard, for example when you are climbing a steep incline the thermal protection is designed to automatically limit the current output to the motor to give it a measure of protection in stall type conditions.

When the controller detects it's critical thermal limit you will realise that the motor automatically slows to a reduced output, when this condition is noted you should safely stop your Scooter and wait for a period of time for the motor and controller to cool before you proceed with your journey. Please be aware this condition is not a fault, but a protection method of reducing irrepairable damage to your motor; it should also be noted that this condition will vary due to ambient temperatures.

FAULT DIAGNOSIS

Faults with the main speed controller are rare (see fig 42) Most faults on powered vehicles are associated with wiring mis-connections due to a lack of maintenance or poor battery performance due to charging errors.

If your **Freerider** Scooter should fail to operate you will be assisted in diagnosis and locating the area of the fault by observing the number of segment flashes emitted from the battery gauge status light on your control console.

If your **Freerider** Scooter fails to operate and the battery gauge status light is not illuminated, first check the points aforementioned under 'FAULT FINDING'.

If your battery gauge status indicator light is flashing, first switch your Scooter to 'off ' and back to 'on' again to see if the problem will clear. If the 'status' light continues to flash and your Scooter will not drive, refer to the 'FAULTS CODE' on page 34 take the appropriate remedial action as advised in the 'comments' column. If in doubt consult the dealer from whom you purchased your **Freerider** Scooter.

STEADY RIPPLING OF BATTERY GAUGE

This indicates that you have switched your Scooter on with the forward-reverse speed lever depressed. Return lever to the neutral speed position and try again.

SPEED CONTROLLER SETTINGS

The forward-reverse speed Controller (fig42 page31) is a state-of -the-art microprocessor designed to give smooth and safe operation, For maximum performance, protection and convenience the Controller is housed in a solid dia cast aluminium case situated under your rear body cover.

The speed Controller, Penny & Giles model EGIS 110 is programmed by **Freerider** to obtain the maximum performance and safety for your **Freerider** Scooter. (See column right)

The original manufacturer's settings for this Scooter are:

ROOT MENU DESCRIPTION	FR510DXs2b		FR510DXX/FR510DXXsb		FR168-3X/FR168-3Xs	
	FAST	SLOW	FAST	SLOW	FAST	SLOW
FORWARD ACCELERATION	23	23	23	23	23	23
FORWARD DECELERATION	10	16	12	16	12	16
REVERSE ACCELERATION	23	23	23	23	23	23
REVERSE DECELERATION	20	20	20	20	20	20
FORWARD SPEED	100	60	100	60	100	60
REVERSE SPEED	40	30	50	30	40	30
THIROTTLE POL"TY	YES		YES		YES	
POWER DOWN TIMER	15m		15m		15m	
ENGINEER MENU DESCRIPTION	FR510DXs2b		FR510DXX/FR510DXXsb		FR168-3X/FR168-3Xs	
CURRENT LIMIT	110		110		110	
COMPENSATION	45m		45m		45m	
HOLD FACTOR	120%		180%		180%	
MID CURRENT	6s/50%		6s/50%		6s/50%	
BRAKE TIME	35		35		35	
ISO TESTS	OFF		OFF		OFF	
INHIBIT MODE	1		1		1	
BRIDGE HOLD	20		20		20	
THROTTLE GAIN	160		160		160	
PULSE REV. ALARM	YES		YES		YES	
WIGWAG THROTTLE	YES		YES		YES	
LOW BATTERY FLASH	YES		YES		YES	
SOFT-STOP	YES		YES		YES	
THROTTLE D'BAND	18%		18%		18%	
OUTPUT VOLTAGE	24V		24V		24V	
TRUCHARGE CABLE	40m		40m		40m	
TRUCHARGE CAL	97		97		97	
MAX. CHARGE AMPS	12		12		12	
MIN CHARGE AMPS	1		1		1	

Warning: Performance adjustments should not be made which could put the operator in a serious situation of control or braking. Performance adjustments should only be made by a person fully trained and conversant with the programming process and it's capabilities.

Warning: Incorrect settings could cause injury to the Scooter operator and/or to bystanders, or damage to the vehicle and/or surrounding property. **If in doubt consult your Freerider Manufacture**

FUSES

The fuses protect your Scooter lighting and direction indicators (flashers) from receiving an overload of electrical current. The fuses used in the Scooter are the same type which are found on automobiles. In the unlikely event that a fuse should 'blow' and need replacing (see fig 43, page 34) use only a fuse of a the same rating. Please note the size of fuse has been selected to give your Scooter the best protection without premature blowing

Warning: Do not use fuses with a higher rating than fitted as this may cause permanent failure to the wiring and wiring. Connectors or personal injury.

Three fuses are located below the Scooter rear body cover (see fig 44) the fuses are positioned in black plastic housings which are sealed by hinged lids.

For access to the fuses, following the removal of your seat and rear body cover, lift the fuse block from it's mounting.

Lift up the appropriate fuse lid and withdraw the 'blown' fuse. Replace the blown fuse with identical rated fuse, close fuse lid and replace fuse block onto mounting. The fuses are located in the following order:-

Left Fuse Block: Charger/Lights (Red 10 amp).

Right Fuse Blocks: Top not used.

Middle 12 volt power supply (yellow 20A).

Bottom Front/Rear Lights (Blue 15A).

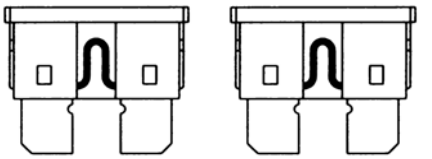

Working fuse Blown fuse(replace)

FIG 43

FIG 44

TECHNICAL SPECIFICATION

Model Code:	FR510DXs2b		FR510DXX/FR510DXXs/FR510DXXsb		FR168-3X/FR168-3Xs	
Dimensions	Cms	Ins	Cms	Ins	Cms	Ins
Total Length	139	55	148	59	132	52
Maximum width over wheels	63	25	62	25	62	24.5
Turning Diameter(between walls)	116	46	165	65	82	32
Maximum seat height from base	50	20	50	20	50	20
Minimum seat height from base	48	19	48	19	48	19
Maximum seat height from ground	68	27	68	27	68	27
Seat backrest angle(adjustable)	90° TO 120°		90°TO 105°		90°TO 105°	
Seat fore-aft sliding adjustment	10	4	NO	NO	NO	NO
Minimum Seat width (arms adjustable)	56	22	71	28	71	28
Seat depth	46	18	48	19	48	19
Backrest height(without extension)	43	17	46	18	46	18
Maximum Handlebar height from ground (adjustable)	106	42	100	39	106	42
Minimum Handlebar height from ground (folded for transportation)	60	24	58	23	60	24
Ground clearance	8.5	3.4	9	3.5	9	3.5
Front Wheel size (Pneumatic)	31	12.5	31	12.5	25.4	10
Rear Wheel size (Pneumatic)	31	12.5	31	12.5	31	12.5
Weight	Kg	Lbs	Kg	Lbs	Kg	Lbs
Total weight (excl. batteries)	57	126	87.5	193	80.5	177
Frame Assembly (heaviest part)	23.5	52	31	68	32.5	72
Seat (include arm rest)	20	44	24	53	24	53
Battery (each)	17 (50 Ah)	37	17(50Ah)	37	17(50Ah)	37
			19(62 Ah)	42	19(62 Ah)	42
Charger	2	4	2	4	2	4
Maximum user weight	160	350	277	500	277	500

CLASSIFICATION Type 'B' (EN12184 : 1999) Class 3(The use of invalid carriages on the highway regulations 1988)
Maximum safe climbing angle: 10° with 350ls (160kg) rider
Safety Note: The safe climbing angle is measured with the seat backrest to their fullest extent, with a rider weight of 350lbs (160kg). The motor on your Scooter is powerful and may be able to climb a steeper incline than the maximum safe climbing angle. Exceeding the safe climbing angle may put you at risk of injury. On no account must you attempt to climb an incline of more than 10° as this will exceed the design capability of the motor and rear stability of your Scooter.
Backrest angle: Rearward stability will be dependent on the position your backrest is adjusted to . The 120° position should not be used if you are contemplating climbing slopes over 5°.
Maximum speed: up to 8mph (13km/h) [+/- 10%] dependent on weight and manufacturing tolerances.
Not: reverse speed is 50% of forward speed.
Range: Up to 35 miles (56km) between charges under ideal conditions. **Note**: Range varies with weight, terrain, temperature, battery condition etc. and is subject to manufacturing tolerances. **Note**: your batteries will need a period of 'running in' before they will reach their optimum capacity. Up to 15 charge/discharge cycles can be expected before full range is experienced. See the battery charging section of this manual.
Tyre Size: 4.00-5.4ply grey
Recommended Tyre Pressure: Front 30psi (2.1bar), Rear 35psi (2.5 bar). Do not exceed maximum inflation figure indicated on tyre wall.
Batteries: 2 x 12 volt. Maintenance free. 50AH sealed lead acid.
Charger: DC output 24 Volt. 5Amp.
Conforms to: EN60335-2-29 and En12184.
Electrical System: 24 volt DC.(Drive system)
12 volt Dc.(Lighting system)

ADDITIONAL FEATURES

Drive system: Rear wheel, direct drive via sealed drive axle.
Motor: 24 volt DC. Permanent magnet, totally enclosed for outdoor use. 4 pole,external brush. 4.5 Amp. (no load) 600W. 5700 r.p.m. (+/-200 r.p.m.)
Brake: Automatic dynamic regenerating braking system with spring activated magnetic solenoid parking brake. Free wheel facility. Manual brake to front wheels.
Modular Design: Easily dismantled into six basic pieces for convenient transporting (see page 21) .
Adjustable Locking Tiller: for driving comfort.
Proportional Speed Control: State of the art design for safety and smooth operation; incorporating 'Fault' diagnosis.
Contoured Seat: With sliding facility, adjustable for height, arm width and armrest angle. Swivels for easy access. Four fixed backrest positions.
Automatic Charger: Charging point is on the handlebars.

CE complies with E.M.C. Directive 89/336/EEC
complies with Medical Devices Directives 93/42/EEC

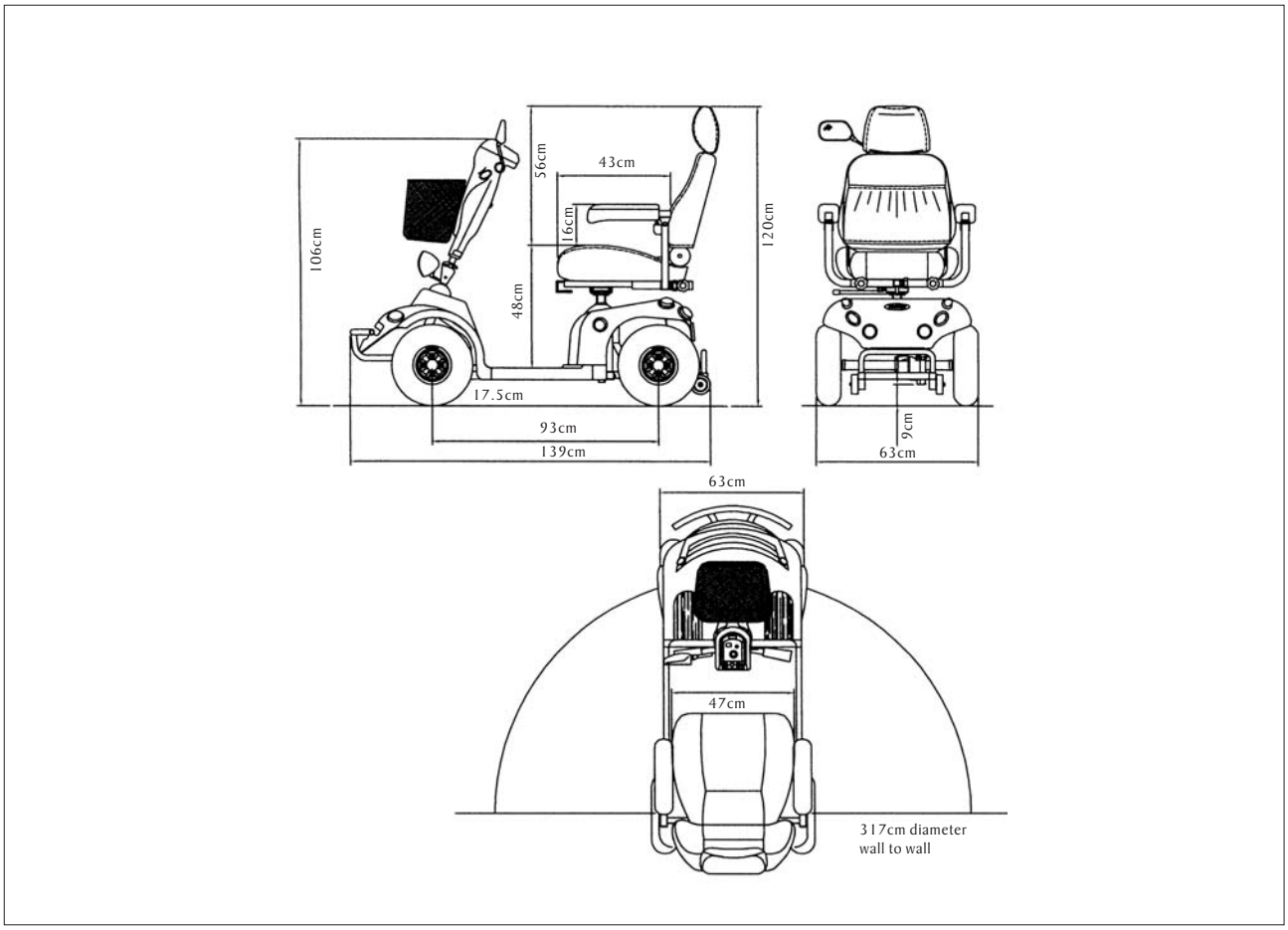

CIRCUIT DIAGRAMS

BATTERY WIRING DIAGRAM

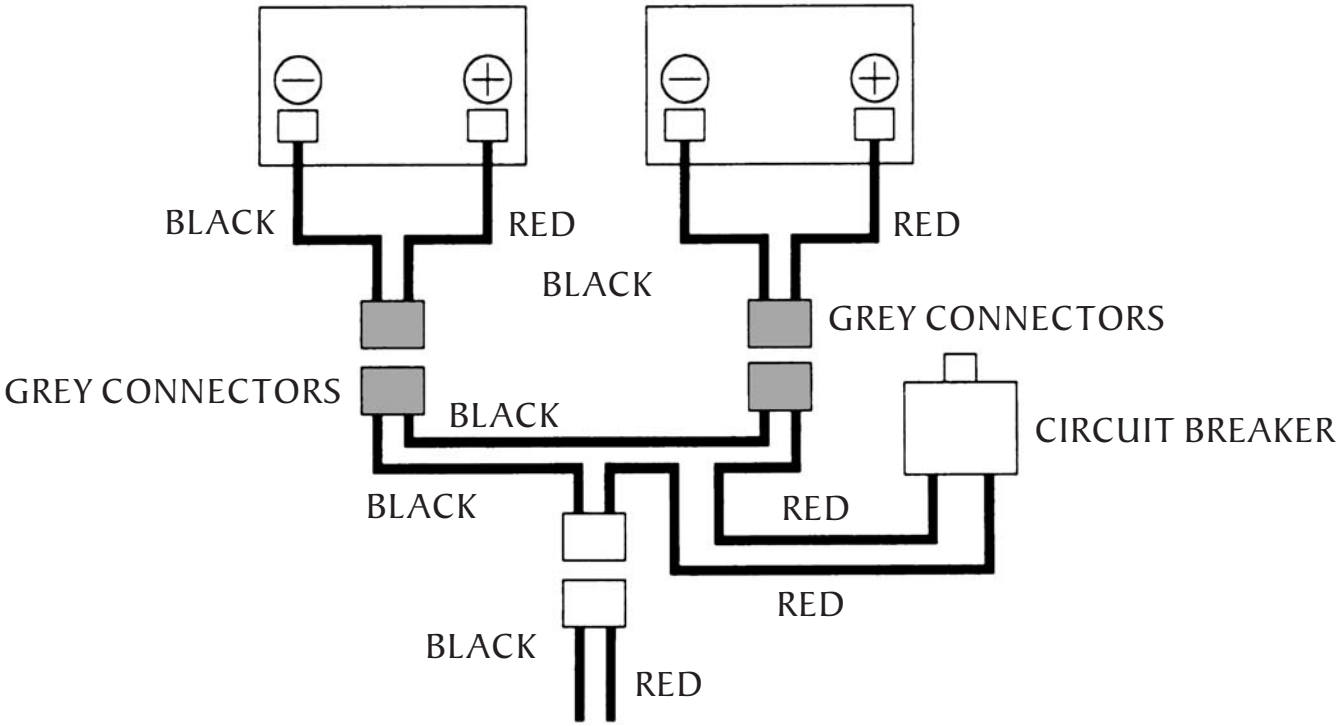

CIRCUIT DIAGRAMS

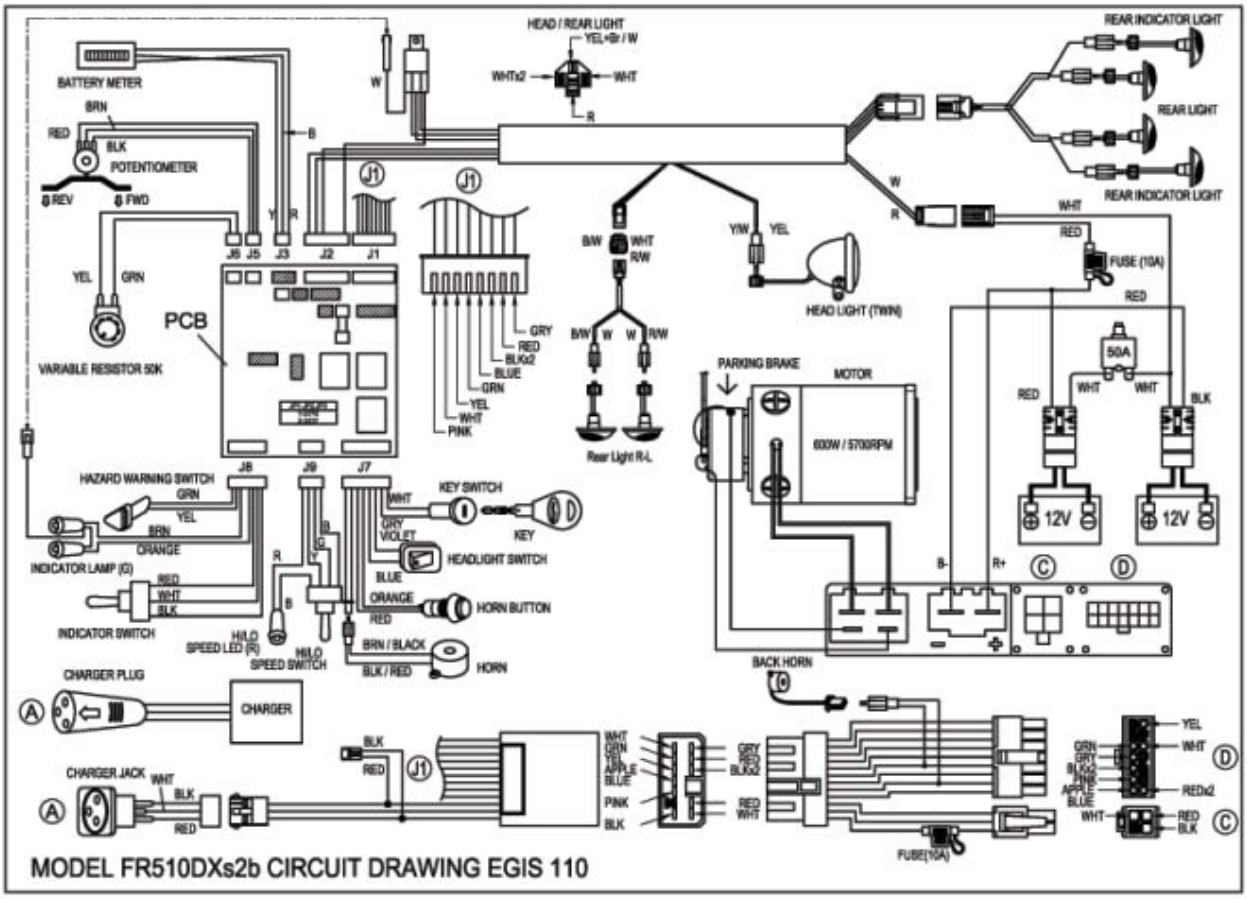

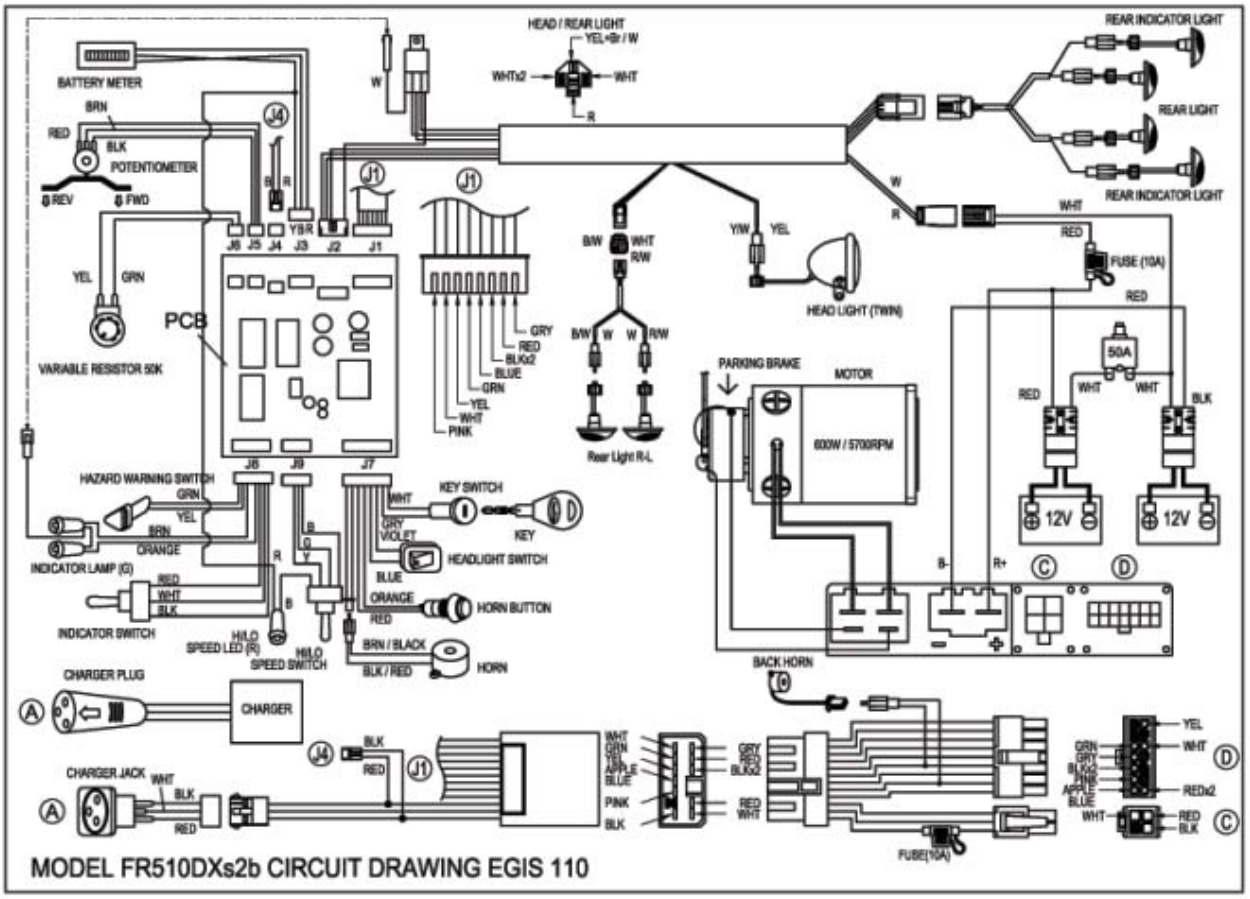

MODEL FR510DXs2b CIRCUIT DRAWING EGIS 110

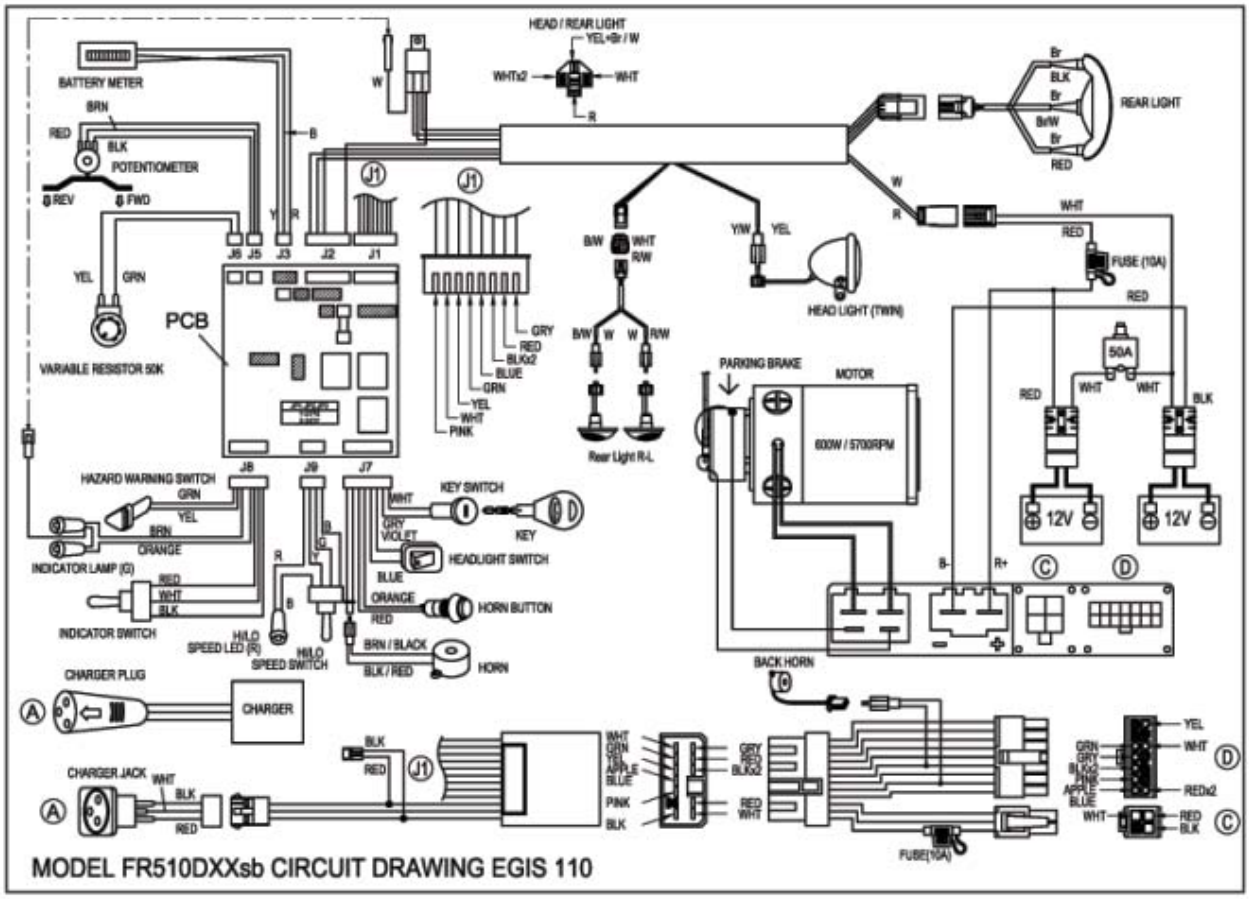

MODEL FR510DXXsb CIRCUIT DRAWING EGIS 110

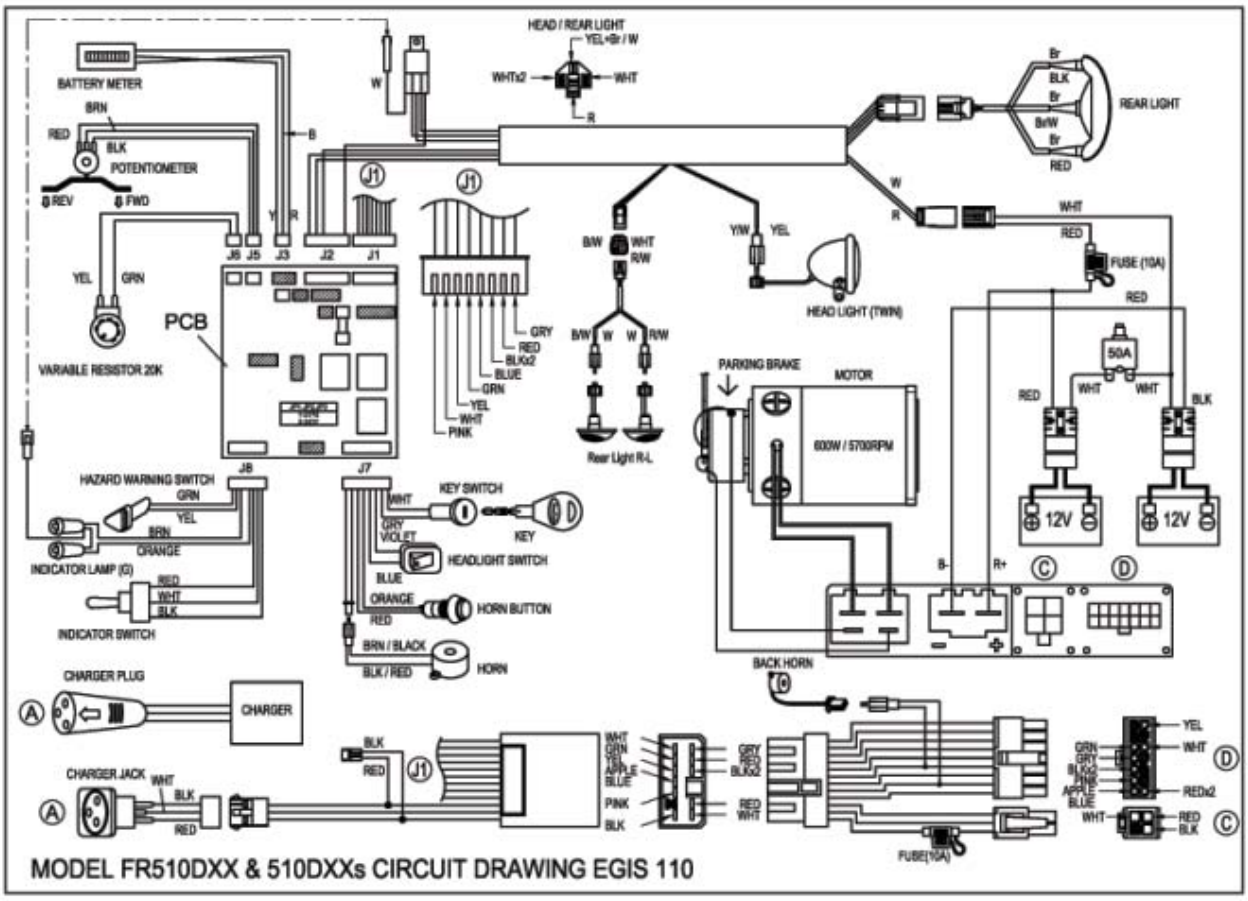
HEAD / REAR LIGHT
YEL+Gr / W
WHTx2
WHT
R
BATTERY METER
BRN
RED
BLK
POTENTIOMETER
REV
FWD
B
W
Y
R
J6 J5 J3 J2 J1
J1
REAR LIGHT
Br
BLK
Br
Br/W
Br
RED
W
R
WHT
RED
FUSE (10A)
RED
YIW
YEL
HEAD LIGHT (TWIN)
B/W
WHT
R/W
B/W
W
W
R/W
Rear Light R-L
YEL
GRN
PCB
VARIABLE RESISTOR 20K
GRY
RED
BLKx2
BLUE
GRN
YEL
WHT
PINK
PARKING BRAKE
MOTOR
600W / 5700RPM
50A
RED
WHT
WHT
BLK
12V
12V
B-
R+
C
D
HAZARD WARNING SWITCH
GRN
YEL
BRN
ORANGE
INDICATOR LAMP (G)
RED
WHT
BLK
INDICATOR SWITCH
J8
J7
KEY SWITCH
WHT
GRY
VIOLET
KEY
HEADLIGHT SWITCH
BLUE
ORANGE
RED
HORN BUTTON
BRN / BLACK
BLK / RED
HORN
BACK HORN
CHARGER PLUG
CHARGER
A
CHARGER JACK
WHT
BLK
RED
BLK
RED
J1
WHT
GRN
GRY
BLUE
PINK
BLK
GRY
RED
BLKx2
BLUE
GRN
YEL
WHT
PINK
RED
WHT
FUSE(10A)
YEL
WHT
GRN
GRY
BLUE
REDx2
WHT
RED
BLK
D
C
MODEL FR510DXX & 510DXXs CIRCUIT DRAWING EGIS 110

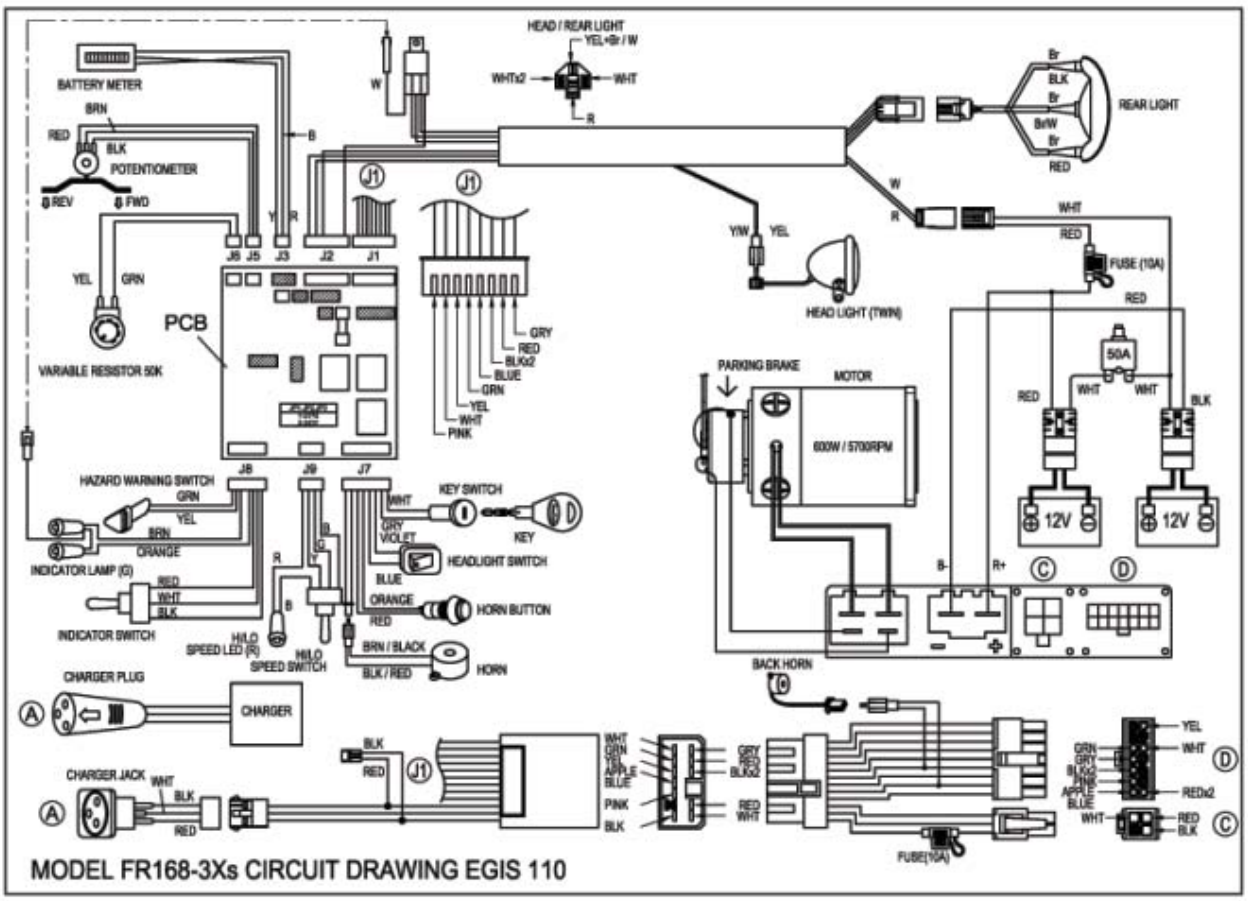
HEAD / REAR LIGHT
YEL+Gr / W
WHTx2
WHT
R
BATTERY METER
BRN
RED
BLK
POTENTIOMETER
REV
FWD
B
W
Y
R
J6 J5 J3 J2 J1
J1
REAR LIGHT
Br
BLK
Br
Br/W
Br
RED
W
R
WHT
RED
FUSE (10A)
RED
YIW
YEL
HEAD LIGHT (TWIN)
YEL
GRN
PCB
VARIABLE RESISTOR 50K
GRY
RED
BLKx2
BLUE
GRN
YEL
WHT
PINK
PARKING BRAKE
MOTOR
600W / 5700RPM
50A
RED
WHT
WHT
BLK
12V
12V
B-
R+
C
D
HAZARD WARNING SWITCH
GRN
YEL
BRN
ORANGE
INDICATOR LAMP (G)
RED
WHT
BLK
INDICATOR SWITCH
J8
J9
J7
KEY SWITCH
WHT
GRY
VIOLET
KEY
HEADLIGHT SWITCH
BLUE
ORANGE
RED
HORN BUTTON
BRN / BLACK
BLK / RED
HORN
R
G
B
HI/LO
SPEED LED (R)
HI/LO
SPEED SWITCH
BACK HORN
CHARGER PLUG
CHARGER
A
CHARGER JACK
WHT
BLK
RED
BLK
RED
J1
WHT
GRN
GRY
BLUE
PINK
BLK
GRY
RED
BLKx2
BLUE
GRN
YEL
WHT
PINK
RED
WHT
FUSE(10A)
YEL
WHT
GRN
GRY
BLUE
REDx2
WHT
RED
BLK
D
C
MODEL FR168-3Xs CIRCUIT DRAWING EGIS 110

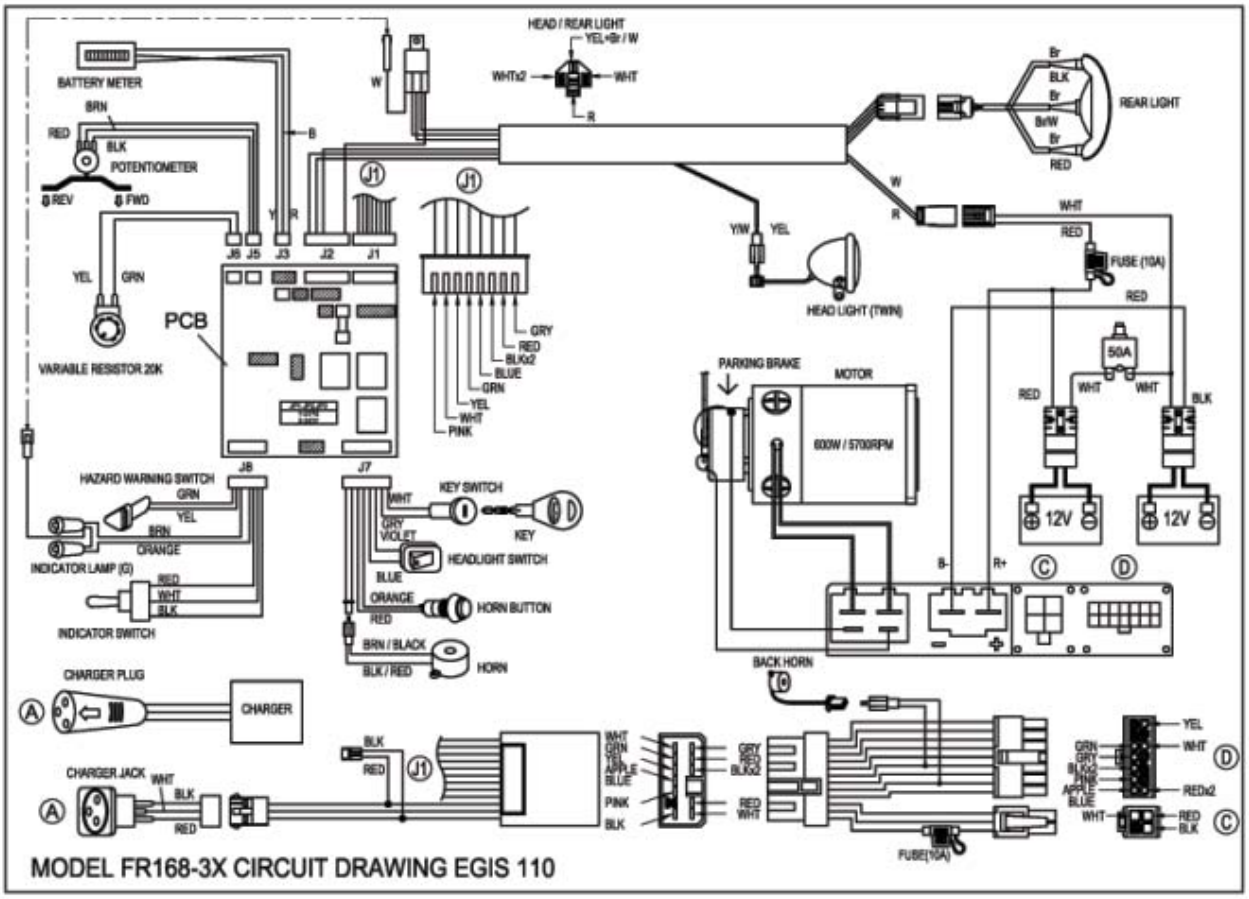

ADVISORY SAFETY NOTICE

Warning: Radio wave sources may affect Scooter control.

Your powered Scooter is designed to operate in appropriate environments, however radio wave sources such as radio or TV broadcasting stations, amateur (Ham) radio transmitters, two-way radios and cellular portable telephones can affect powered motorised Scooters.

The following warnings listed below should reduce the chance of unintended brake release or uncontrolled powered Scooter movement.

1. **Do not turn on** hand held personal communication devices such as citizen ban (CB) radios and cellular phones, while your **Freerider** Scooter is turned on.
2. Be aware of nearby transmitters such as radio or TV stations, and try to avoid coming into close contact with them.
3. If unintended movement or brake release should occur, turn your **Freerider** OFF as quickly as it is safe to do so.
4. Be aware that adding accessories or components or Modifying your **Freerider** Scooter may make it more susceptible to interference from radio wave sources. Note: There is no easy way to evaluate their effect on the overall immunity of your powered Scooter.
5. Report all incidents of unintended movement or brake release to your **Freerider** supplier, noting if there is a radio wave source nearby. He will then be able to diagnose your Scooter to eliminate any possible Scooter component failure. Please note a charge may be made for this service.

Your Scooter has been tested to the following standards with reference to EN12184. Emissions EN50022(B), Immunity IEC1000-4-3, E.S.D. IEC801-2

Note: All figures, speeds, measurements and capacities shown in this manual are approximate and do not constitute specifications. Our policy is one of continual improvement. We reserve the right to alter, without notice, any weights, measurements or other technical data shown in this manual. If you require specific accurate data, please contact your Freerider authorised dealer.

Enjoy your Scooter

CODE OF PRACTICE FOR CLASS 3 VEHICLE USERS

WHAT IS A CLASS 3 VEHICLE?

Three types of 'invalid carriage' are defined in The Use of Invalid Carriages on Highways Regulations 1988':

Class 1 - manual wheelchair, i.e. self-propelled or attendant-propelled, not electrically powered;

Class 2 - powered wheelchairs and scooters, for footway use only with a maximum speed limit of 4 mph.

Class 3 - powered wheelchairs, and other outdoor powered vehicles, including scooters, for use on roads/highways with a maximum speed limit of 8 mph and facility to travel at 4 mph on footways (see also definition page 4 of this manual).

WHERE CAN CLASS 3 VEHICLES BE USED?

They can be use:
On footpaths, pavements, bridleways and pedestrian areas at a maximum speed of 4 mph.
On most roads at a maximum speed of 8 mph.
They cannot be used on motorways, cycle lanes or in bus lanes (when in operation). Nor is it advisable to use them on unrestricted dual carriageways (i.e. those with a speed limit of over 50 mph). If they are 4-wheeled vehicles, then they must use an amber flashing light for conspicuity when used on dual carriageways.

WHAT ARE THE LEGAL REQUIREMENTS?

A Class 3 vehicle is not legally defined as a motor vehicle and, therefore, the user is not required to have a driving licence or to take a test. The vehicles themselves are not subject to Vehicle Excise Duty ('road tax') or mandatory insurance requirements. However, the law does say that:
a Class 3 vehicle can only be used by a disabled person aged 14 or over, or by an able-bodied person who is demonstrating a vehicle before sale, training a disabled user or taking the vehicle to or from a place for maintenance or repair.
The vehicle must have certain construction features, including:
- a maximum unladen weight of 170 kg (380 lbs);
- a maximum width of 0.85 metres (2'9");
- a device to limit its speed to 6.4 kmph (4 mph);
- a maximum speed of up to 12.8 kmph (8 mph);
- an efficient braking system;
- front and rear lights and reflectors, and direction indicators which are able to operate as a hazard warning signal;
- an audible warning instrument (horn);
- a rear view mirror;
- an amber flashing light if a 4-wheeled vehicle is used on an unrestricted dual carriageway. i.e. a dual carriageway road having a maximum speed in excess of 50 mph.

If these conditions are not met, you are liable to prosecution by the police.

Should I have insurance?

Although it is not a legal requirement, an insurance policy is strongly advised. Suitable schemes are not too expensive and are available to cover your personal safety, other people's safety and the value of the vehicle.

WHAT SHOULD I DO TO PREPARE MYSELF FOR THE ROAD?

If you are using a powered vehicle for the first time, or if it is a while since you have driven on the road, you are strongly advised to get some training. For details of courses, contact your local Disabled Living Centre, Mobility Centre or your local authority's Road Safety Unit, or contact the Department of Transport's Mobility Unit. Useful addresses are listed at the end of this booklet.
Carefully read the owners instruction manual for your **Freerider** Scooter before driving. Please make certain it is in full working order.
In addition to this booklet, you should also look at a current edition of the Highway Code and become familiar with the various traffic signs and signals you may come across when you are driving.
Although there is no legal eyesight requirement, you should be able to read a car's registration number from a distance of 12.3 metres (40 ft).
It is essential that you monitor your ability to do this regularly throughout your time as a Class 3 vehicle user.
It is advisable to wear fluorescent clothing during the day and something reflective at night. This will help others to see you in daylight or poor visibility. The leaflet 'Be Safe. Be Seen', which is available free from the Department of Transport, gives advice on clothing. But above all don't wear dark clothes at night.
Your **Freerider** Scooter has a lap belt fitted to it, always use it - even for short journeys.
As a general rule, plan your journeys carefully. This way, you could reach your destination without having to negotiate major roundabouts, rush-hour traffic, or busy roads. However, if the situation on the road does become too daunting, you can always switch to pavement mode (4 mph) and move to the footway until you feel confident enough to rejoin the traffic.

WHAT 'RULES OF THE ROAD' SHOULD I FOLLOW?

Class 3 vehicles should not be used if you are under the influence of alcohol, drugs, or medication that may affect your driving ability. If you are in any doubt, consult your doctor.

ON FOOTWAYS

Show consideration for pedestrians, particularly elderly people or those who are blind, partially sighted, deaf or hard of hearing. Although Class 3 vehicles can legally travel at 4 mph on footways or in pedestrian areas, it is not always safe to travel at this speed if pedestrians are not able to move out of the way quickly enough, e.g. in a crowded shopping precinct.
You can take advantage of pelican and zebra crossings when in 4 mph mode in order to cross from one footway to another.
When moving off the footway on to the road (to use the vehicle in the high speed mode), take special care. Before moving off, always look round and make sure it is safe to join the traffic and watch out, in particular, for cyclists.

ON THE ROAD

When on the road, drive with due care and attention, always travelling in the direction of the traffic, obeying traffic signs and signals and give way to pedestrians who are crossing at junctions or pedestrian crossings. Keep a special look out for children crossing roads because they may lack the skills and experience to negotiate traffic safely. Remember that, in comparison with the majority of other vehicles on the road, a Class 3 vehicle is not powerful or conspicuous. As a Class 3 vehicle driver, you are often in a similarly vulnerable position to cyclists - especially at roundabouts and junctions. Direction indicators must always be used to indicate manoeuvres on the road.

Always use the front and rear lights in the dark or when visibility is poor due to adverse weather conditions.

The vehicle's horn should not be used when the vehicle is stationary (unless there is danger due to another moving vehicle) or between 11.30 at night and 07.00 in the morning. When the vehicle is moving, the horn should be used to warn other road users that you are there - it should not be used as a rebuke.

Watch out for obstructions in the road ahead, such as drains, pot-holes and parked cars. When passing parked cars, watch out for doors being opened in your path or the vehicle moving off without indicating.

HOW TO DEAL WITH ROAD JUNCTIONS AND ROUNDABOUTS?

Take extra care at junctions. When going straight ahead at road junctions, check to make sure there are no vehicles about to cross your pat.
When turning left, watch out for other vehicles overtaking, prior to turning left across your path.
There are several options for dealing with right turns, especially turning from a major road. If moving into the middle of the road is difficult or dangerous, you can stop on the left hand side of the road and wait for a safe gap in the traffic. You can also negotiate the turn as a pedestrian, i.e. switching to pavement mode and travelling between footways. If the junction is too hazardous, it may be worth considering an alternative route.
Similarly, when negotiating major roundabouts, e.g. roundabouts with two or more lanes, it may be safer to stay in the left hand lane, even when you are turning right or taking the last exit and treat each exit you cross as a junction. Alternatively, it may be safer to use the footway or find a route which avoids the roudabout altogether.

PARKING

All the normal parking restrictions should be observed. Your vehicle should not be left on the footways unattended if it causes an obstruction to other pedestrians - especially those in wheelchairs or those with prams or pushchairs. Remember too, to look out for blind or partially sighted people when parking.
Parking concessions provided under the Blue(Orange) Badge Scheme will apply to all Class 3 vehicles displaying a current badge. If you think you are entitled to a badge, you can apply to your Local Authority Social Services Department or to the Chief Executive of your local Regional or Island Council if you live in Scotland.

HOW CAN I KEP MY VEHICLE ROADWORTHY?

It is essential that you keep your vehicle in good working order in accordance with **Freerider's** recommendations. **Freerider** suppliers should be able to answer any questions you might have about the maintenance of your Class 3 vehicle.
In general, keep your batteries fully charged and your tyres at the correct pressure.
Lighting equipment should be kept clean and in good working order. Windows, windscreens and mirrors should also be clean and clear of obstructions for good all-round vision.
It is important that your vehicle undergoes a thorough safety check at least once a year.

FREERIDER SCOOTER SPARE PARTS

Your Scooter is an electro-mechanical machine. Some of its consumable components will need replacing due to normal wear and tear.

The following list of components can be purchased from your local **Freerider** Agent from whom you purchased your Scooter. Quoting model code FR510DXs2b/FR510DXX/FR510DXXs/ FR510DXXsb/FR168-3X/FR168-3Xs

DESCRIPTION		PART number
Control Console Assembly	510DXs2b	AA01-0300-B2
Control Console Assembly	510DXXsb、168-3Xs	AA01-0300-S2
Control Console Assembly	510DXX、DXXs、168-3X	AA01-0602-S2
Handlebar Grip (P.V.C.)		PP02-0200-PVC
Charger Socket Assembly		PAE1-0404-NP
Front Basket	510DXs2b	PM90-0100
Front Basket	510DXX、DXXs、DXXsb、168-3X、3Xs	PM90-0102
Charger 5Amp		PK90-H502-I
Bearing for Steering Handlebar(large)		PM08-0600
Bearing for Steering Handlebar(top)		PM08-0700
Drive Transaxle	510DXs2b	PM11-0208
Drive Transaxle	510DXX、DXXsb、168-3X、3Xs	PM11-0209
Motor		PM11-0314-SY57
Motor Brake	510DXs2b、510DXX、168-3X	PM11-0107
Motor Brake	510DXXs、DXXsb、168-3Xs	PM11-0111
Motor Assembly	510DXs2b	PA05-A115
Motor Assembly	510DXX、168-3X	PA05-A115-G
Motor Assembly	510DXXs、DXXsb、168-3Xs	PA05-A123-GC
Motor Carbon Brush		PM11-0408
Motor CArbon Brush Cover		PP11-0205
Hub(Front wheel)	510DXX、DXXs、168-3X、3Xs	PM12-0100
Hub(Rear wheel)		PM13-0103
Brake Drum Assembly	510DXs2b、DXXsb	PA19-A500
Front Tyre(Innova)	168-3X、3Xs	PP92-0300-GI
Front Tyre(CS)	168-3X、3Xs	PP92-0300-GC
Front Tube(Innova)		PP93-0300-I
Front Tube(CS)		PP93-0300-C
Front & Rear Tyre(Innova)	510DX	PP92-0400-GI
Front & Rear Tyre(CS)	510DX	PP92-0400-GC
Front & Rear Tube(Innova)		PP93-0400-I
Front & Rear Tube(CS)		PP93-0400-C
Self Lock Nut Front / Rear Wheel M12		PU00-1202
Floor Mat	168-3X	PP04-0511
Floor Mat	510DXX	PP04-0512
Floor Mat	510DXs2b	PP04-0508
Arm Rest Pad	510DXX、DXXs、DXXsb、168-3X、3Xs	PA14-A100
Arm Rest Pad	510DXs2b	PP14-0101
Arm Tighten Knob	510DXs2b	PP00-0200
Hand Brake Cable	510DXs2b、DXXsb	PM19-0302
Power Key		PM01-0100
Horn Button		PKE1-0103
Horn (Round)	510DXs2b	PKE1-0603
Horn (Square)	510DXX、DXXs、DXXsb、168-3X、3Xs	PKE1-0602
Battery Meter		PKE1-0703
Top Console Board		PAE1-0305
Controller (P&G EGIS 110)		PKE2-0101
Potentiometer 5K Assembly		PAE1-0201
Varible Resistor 20 K	510DXX、DXXs、168-3X	PAE1-0100
Varible Resistor 50 K	510DXs2b、DXXsb、3Xs	PAE1-0101
Black Knob (min-max speed)		PP01-0500
Circuit Breaker (50 amp)		PKE2-0402
Mirror Right		PP90-0202-R
Mirror Left		PP90-0202-L
Hi-Lo Speed Switch		PKE1-0104
Direction Indicator Switch		PKE1-0105
Indicator Bulb		PK00-0103
Front Light Bulb	510DXX、DXXs、168-3X、3Xs	PK00-0106
Front Light Bulb	510DXs2b、DXXsb、3Xs	PK00-0104
Linear Disc With Spring	510DXs2b、DXXsb、3Xs	PM19-0701
Off Board Charging Cable		PK90-0403

OPTAINAL ACCESSORIES

For information regarding these optional accessories please contact your Authorised **Freerider** Agent.

Warning: The rear basket and crutch /can holder will extend the dimensions of your Scooter. Please allow for this when turning.
Do not overload carrying accessories as this will make your Scooter less stable. Note: The maximum basket and storage box load 2kg(4.5lbs)

Warning: The all-weather canopy must not be used in high wind conditions.
Note: The rear mounted storage items(☆)cannot be used when an All-weater Canopy is fitted.
Note: Accessories illustrated are displayed on various models of **Freerider** Scooters.

DELTA CONTROL
for Scooter users with limited hand dexterity, the Delta Controller allows the driver to operate the Scooter by pulling the lever towards themselves.

ALL WEATHER CANOPY
Protects you from winter showers, keeping you and your belongings dry. Zipped doors and integral rear storage compartment.

COMBINED BASKET, STICK/CRUTCH HOLDER☆
Combining the usefulness of the rear basket and the stick/crutch holder.

STICK/CRUTCH HOLDER☆
Ideal way to carry your walking aids

REAR BASKET☆
Provides easily accessible additional carrying capacity for shopping.
Basket maximum load 2kg (4.5lbs)

LOCKABLE STORAGE BOX☆
This smart storage box allows you to lock away your valuable items when leaving your Scooter unsupervised.
Maximum load 2kg (4.5lbs).

Warning: The rear basket and crutch/cane holder will extend the dimensions of your Scooter. Please allow for this when turning.
Do not overload carrying accessories as this will make your Scooter less stable.

Please note : Accessories illustrated are displayed on various models of Freerider Scooters.

GUARANTEE TERMS

GUARANTEE TERMS

Please keep a note of your serial No. .....
(This is located on a plate on the front frame tube, under the front body cover).

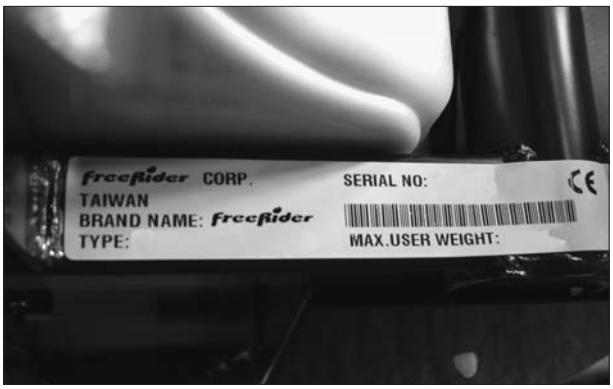

Your Scooter is guaranteed for 12 months from the date of purchase against faults arising due to defects in manufacture or materials. This guarantee does not detract from, but is in addition to your legal rights. Parts replaced or repaired under the terms of this guarantee will be covered for the balance of the 12 months period. This guarantee applies only to parts supplied or approved by **Freerider®**

Due to the individual prescription nature of this product. This guarantee is not transferable.

Note: Extended guarantee insurance can be arranged by your **Freerider** Distributor, he will be able to advise the extra cost of this cover.

WARRANTY REGISTRATION

To enable **Freerider** to handle any enquiries regarding the guarantee of your Scooter; please complete and return the pre-paid warranty registration card supplied with your Scooter at your earliest convenience. If you prefer use our website at www.freerider.com.tw

Exclusions: This guarantee does not extend to consumable items which may need replacing due to normal wear and tear, namely tyres, tubes, punctures, lubrication, carpets, oil seals, gaskets, screws, brake shoes, mirrors, bulbs, upholstery, motor brushes, fuses, batteries, handgrips etc. or to damage to the product caused by mis-use, neglect or accident for which **Freerider** or its agent cannot be held responsible.
This guarantee does not apply if your Freerider shows signs of excessive wear and abuse, or has been modified without the authority of **Freerider**.

This guarantee does not cover the following items:

1. Any noise or vibration, which does not effect the quality and function of the machine.
2. Damage due to lack of maintenance or improper use or operation or storage.
3. Fees for the regular service inspection and maintenance.
4. Any fees incurred as a result of warranty repair, losses or compensation because of the inability to use the Scooter (telephone use, shipping, car rental, travel fees etc.)

METAL WORK: Metal components, such as the framework and bright metal parts require special attention and may deteriorate in certain conditions. Moisture and salt may corrode parts left unattended, proprietary auto cleaner polishes should be used to Prevent long term damage. Failure to clean and protect these components may void your warranty.

PAINT WORK: This guarantee does not cover deterioration of paintwork resulting from the lapse of time i.e. natural fading. It is the users responsibility to clean and protect the painted surfaces.

SPEED CONTROLLER: Servicing of the speed controller or battery charger must only be carried out by your local authorised Freerider distributor. Any attempt to open or dismantle these items render the guarantee void on that item.

BATTERIES: Batteries carry a limited 12 month guarantee from the original manufacturer which is subject to a stringent wear and tear clause. Any battery faults due to a defect in the original manufacture will normally become obvious within the first two months of use.(See batteries and battery charging section of this manual). Any gradual deterioration in the performance after this period is normal and associated with fair wear and tear, mis-use or accidental damage and as such is not covered by the manufacturers warranty. (Batteries are guaranteed as single parts, only the failed part is replaceable).

Warning: Do not attempt to open the battery vent plugs.

SERVICE CHECKS

In line with all mobility vehicles, your **Freerider** will benefit from regular service inspections to keep it in pristine condition. The frequency of these service inspections will depend on the amount of use your vehicle is put to. We strongly recommend you contact your local **Freerider** distributor to arrange for a service visit. (See Care & Maintenance Section of this manual).

Your **Freerider** product must be fully serviced at least every 12 months or more frequently if conditions and use require it.

Please contact your authorised **Freerider** distributor who will be able to advise you of his current costs affecting service visits. Please note: Non-warranty service costs are chargeable.

The warranty on your **Freerider** may not apply if routine maintenance is not carried out as defined in the 'Care and Maintenance' section in this manual.

WARRANTY SERVICE VISIT: If your Scooter should need attention due to failure as defined under the guarantee terms, please contact the distributor from whom you purchased your machine. The Scooter shown and described in this manual may not be exactly identical in every detail as your own **Freerider**. However, all instructions are still entirely relevant, irrespective of detail differences. If you are not sure of any details, please consult your **Freerider** Authorised Distributor before driving your Scooter.

DISCLAIMER

Freerider® disclaims all responsibility for any personal injury or property damage which may occur as a result of improper or unsafe use of its products. Mechanical or electrical defects will be dealt with on a contingency liability basis. The part or parts will be replaced or repaired but no responsibility for damage or injury can be implied to **Freerider®**.

Guidelines in this manual are intended to assist you in the safe operation of your **Freerider** powered Scooter. If you should have any questions about the correct operation of your Scooter, please contact your authorised **Freerider** dealer. Consult your doctor and therapist if you are in doubt about your ability to operate your **Freerider** Scooter.

It is the responsibility of the user to carry out daily inspections and regularly maintain and keep records of inspection and maintenance covered in this manual. The user is also responsible for the proper use of the Scooter as detailed in this manual.

SERVICE HISTORY

This section is designed to assist you in keeping a record of any service and repairs to your **Freerider** Scooter. Should you decide to seel or exchange your Scooter in the future this will prove most helpful to you.Your Service agent will also benefit from a documented record and this book should accompany the Scooter when service or repair work is carried out. The service agent will complete this section and return the book to you.

DETAILS OF WORK CARRIED OUT	DEALER STAMP
	DATE INITIALS

DETAILS OF WORK CARRIED OUT	DEALER STAMP
	DATE INITIALS

DETAILS OF WORK CARRIED OUT	DEALER STAMP
	DATE INITIALS

DETAILS OF WORK CARRIED OUT	DEALER STAMP
	DATE INITIALS

SERVICE HISTORY

This section is designed to assist you in keeping a record of any service and repairs to your **Freerider** Scooter. Should you decide to seel or exchange your Scooter in the future this will prove most helpful to you.Your Service agent will also benefit from a documented record and this book should accompany the Scooter when service or repair work is carried out. The service agent will complete this section and return the book to you.

DETAILS OF WORK CARRIED OUT	DEALER STAMP
	DATE INITIALS

DETAILS OF WORK CARRIED OUT	DEALER STAMP
	DATE INITIALS

DETAILS OF WORK CARRIED OUT	DEALER STAMP
	DATE INITIALS

DETAILS OF WORK CARRIED OUT	DEALER STAMP
	DATE INITIALS

SERVICE HISTORY

This section is designed to assist you in keeping a record of any service and repairs to your **Freerider** Scooter. Should you decide to seel or exchange your Scooter in the future this will prove most helpful to you.Your Service agent will also benefit from a documented record and this book should accompany the Scooter when service or repair work is carried out. The service agent will complete this section and return the book to you.

DETAILS OF WORK CARRIED OUT	DEALER STAMP
	DATE INITIALS

DETAILS OF WORK CARRIED OUT	DEALER STAMP
	DATE INITIALS

DETAILS OF WORK CARRIED OUT	DEALER STAMP
	DATE INITIALS

DETAILS OF WORK CARRIED OUT	DEALER STAMP
	DATE INITIALS

YOUR LOCAL DEALER

FreeRider® working together

FREERIDER CORP

Head Quarter and Kaohsiung Facility:
181 Ta-Te 1st Rd,Kang-Shan
Town,Kaohsiung,820,Taiwan
TEL:886-7-6223093 FAX:886-7-6230307
Taipei office:
24 Nan-Shan Rd,Chung Ho City,
Taipei 235, Taiwan
TEL:886-2-22480666 FAX:886-2-22401753
E-mail:sales@freerider.com.tw
http://www.freerider.com.tw

Freerider has a policy of continual improvement. We reserve the right to change specification without prior notice.All contents of this manual© Freerider 2005
No reproduction in any from of this manual in whole or in part (except for brief quotations in critical articles or reviews),may be made without the written authorisation from Freerider.